Yach.com | 雅驰实业

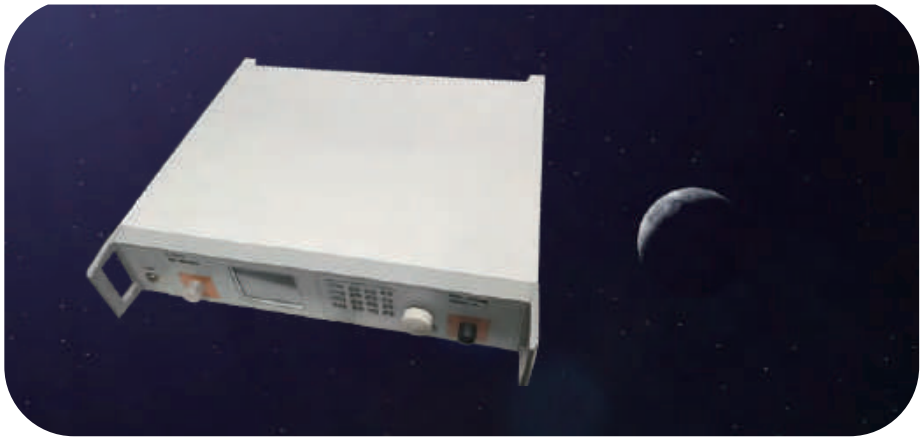

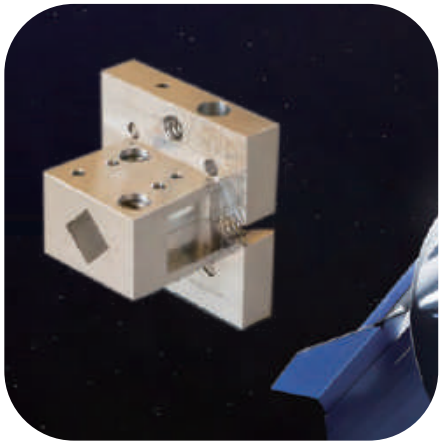

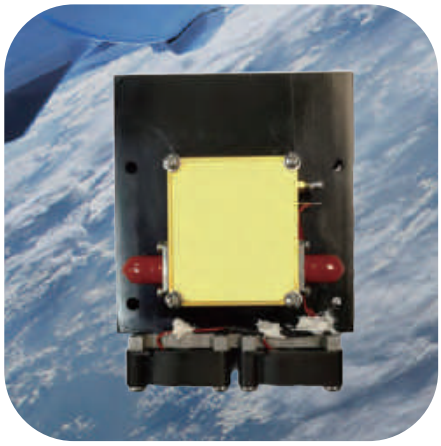

雅驰实业（上海）有限公司

Yach Industry (Shanghai) Co., Ltd.

雅驰实业

Yach.com

雅驰实业（上海）有限公司
Yach Industry (Shanghai) Co., Ltd.
地址：上海 北京 西安
Add: Shanghai Beijing Xi'an
联系人Contact：销售部Sales
TEL: +86-21-8039 4921
Mobile: +86-136 1171 4696
E-mail: info@yach.com

目录

Type/ Part Number	Frequency	Pag
Coaxial Single Couplers：		
CP523265	2- 40 GHz	01
CP523267	1- 40 GHz	02
CP523270	2- 50 GHz	03
CP523275	10- 50 GHz	04
CP523278	8- 40 GHz	05
CP523281	1- 18 GHz	06
Low Noise Amplifier：		
LNA775109	50- 75GHz	07
LNA775120	0.5-18GHz	08
LNA775124	18- 40GHz	09
LNA775128	0.5-40GHz	10
LNA775129	0.5- 2 GHz	11
LNA775130	0.01-6GHz	12
LNA775133	40- 60GHz	13
LNA775134	0.01-1GHz	14
LNA775136	0.5-50GHz	15
LNA775137	14- 27 GHz	16
LNA775140	1- 18 GHz	17
LNA775141	2- 6 GHz	18
LNA775142	8-26.5GHz	19
LNA775143	0.3-18GHz	20
LNA775144	0.1-18GHz	21
LNA775146	0.1-20GHz	22
LNA775147	12- 18 GHz	23
LNA775149	4- 18 GHz	24
LNA775150	0.2- 4 GHz	25

LNA775160.....75-110GHz 26
LNA775170.....250-350GHz 27

Amplifier

PA2654033.....26.5-40GHz 28
PA8375120.....2 - 18 GHz.....29
PA8375121.....0.5-18 GHz 30
PA8375125.....1 - 2 GHz 31
PA8375127.....18-26.5GHz.....32
PA8375128.....0.1 - 2 GHz 33
PA8375129.....2-18 GHz.....34
PA8375131.....18-40 GHz 35
PA8375136.....0.3-18 GHz 36
PA8375139.....0.5-50 GHz 37
PA8375141.....0.3-26.5GHz 38
PA8375142.....2- 18 GHz 39
PA8375144.....1 - 4 GHz 40
PA8375145.....0.2-4 GHz 41

SP2T Switches

SW515202.....0.5-40 GHz 42
SW515212.....18-40 GHz 43
SW516151.....0.8-20GHz 44
SW516154.....1-26.5GHz 45
SW516158.....0.5-12GHz.....46
SW516168.....0.5-2 GHz.....47
SW516169.....1-40 GHz.....48
SW516173.....0.5-6 GHz 49

SP3T Switches

SW516149.....0.02-1 GHz.....50
SW516152.....0.02-18GHz.....51
SW516164.....0.6 - 6 GHz.....52

SP4T Switches

SW515204.....0.3-18GHz 53
SW515206.....0.3-26.5GHz 54
SW515207.....1 - 18 GHz 55

SW516130.....0.5-4 GHz 56
SW516144.....0.5-50 GHz 57
SW516159.....0.05-26GHz 58
SW516166.....1 - 6 GHz 59
SW516167.....0.4-6 GHz 60
SW516182.....30-50 GHz 61
SW516188.....0.5-40 GHz 62

SP6T Switches

SW516170.....1 -6 GHz 63
SW516171.....0.1-40 GHz 64

SP8T Switches

SW516136.....0.05-6GHz 65
SW516148.....0.5-50GHz 66
SW516163.....0.5-40GHz 67
SW516177.....1-18 GHz 68

Coaxial Test Cables

TC522122.....DC-48 GHz 69
TC522124.....DC-50 GHz 70
TC522125.....DC-40 GHz 71
TC522138.....DC-110GHz 72

Waveguide to Coaxial Connector

AD100002.....75-110GHz 73
AD120002.....60-90 GHz 74
AD150002.....50-70 GHz 75
AD190002.....40-60 GHz 76

Horn Antenna

Series.....50-1100GHz 77

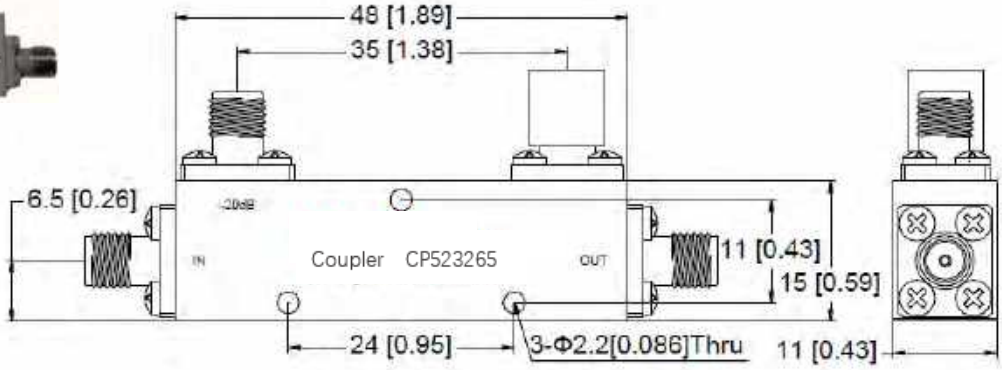

Electrical Specifications	
Operating Frequency	2 – 40 GHz
Input Power	30 W
Coupling	20±1 dB
Directivity	⩾10 dB Min.
Insertion Loss	⩽2.0 dB Max.
Amplitude Stability	±1 dB Max.
VSWR	⩽1.6
Impedance	50 Ω
Interface	2.92-F
Temperature (Ambient Range)	-40℃ ～+70℃

Yach reserves the right to change this datasheet without notice！

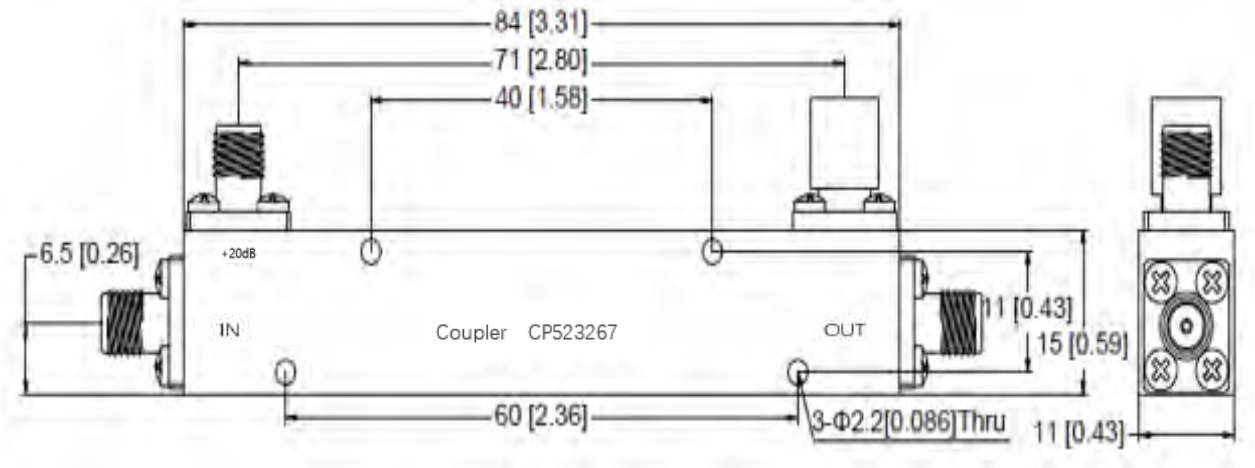

Electrical Specifications	
Operating Frequency	1 – 40 GHz
Input Power	30 W
Coupling	20±1 dB
Directivity	⩾10 dB Min.
Insertion Loss	⩽2.0 dB Max.
Amplitude Stability	±1 dB Max.
VSWR	⩽1.5
Impedance	50 Ω
Interface	2.92-F
Temperature (Ambient Range)	-40 ℃~ +70 ℃

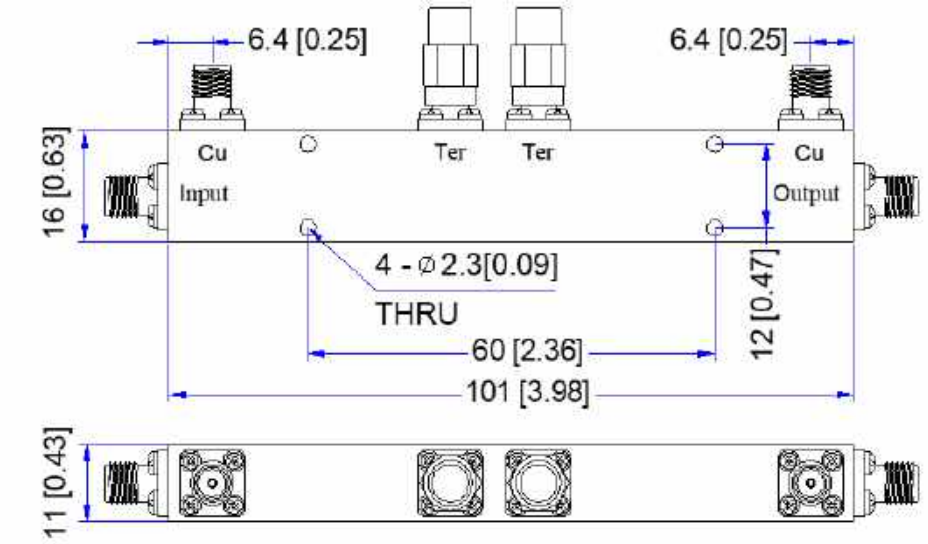

Electrical Specifications	
Operating Frequency	2 – 50 GHz
Input Power	10 W
Coupling	10
Coupling Accuracy	±0.8 dB Typ. ±1.2 dB Max.
Directivity	10 dB Min.
Insertion Loss	5 dB Typ. 6 dB Max.
Amplitude Stability	±1.2 dB Typ.. ±1.5 dB Max.
VSWR	1.6 Typ. 1.8 Max.
Impedance	50 Ω
Material	Aluminum
Interface	2.4-F
Temperature (Ambient Range)	-50℃~ +105℃

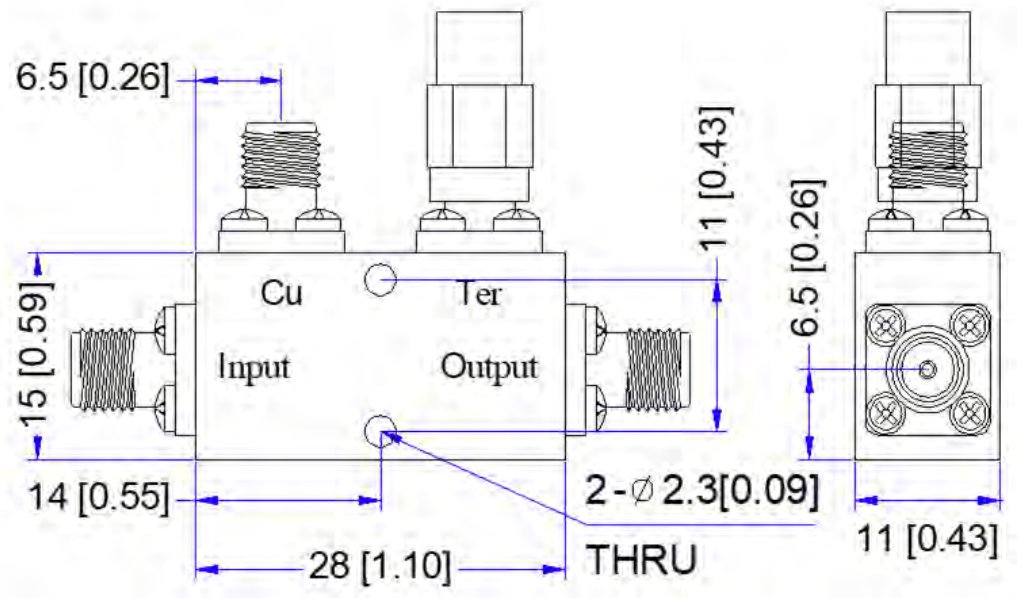

Electrical Specifications	
Operating Frequency	10 – 50 GHz
Input Power	14 W
Coupling	30±0.7 dB
Directivity	⩾10 dB Min.
Insertion Loss	⩽1.8 dB Max.
Amplitude Stability	±0.8 dB Max.
VSWR	⩽1.8
Impedance	50 Ω
Interface	2.4-F
Material	Aluminum
Finishing	Epoxy Paint (Gray Color)
Temperature (Ambient Range)	-40 ℃~ +70 ℃

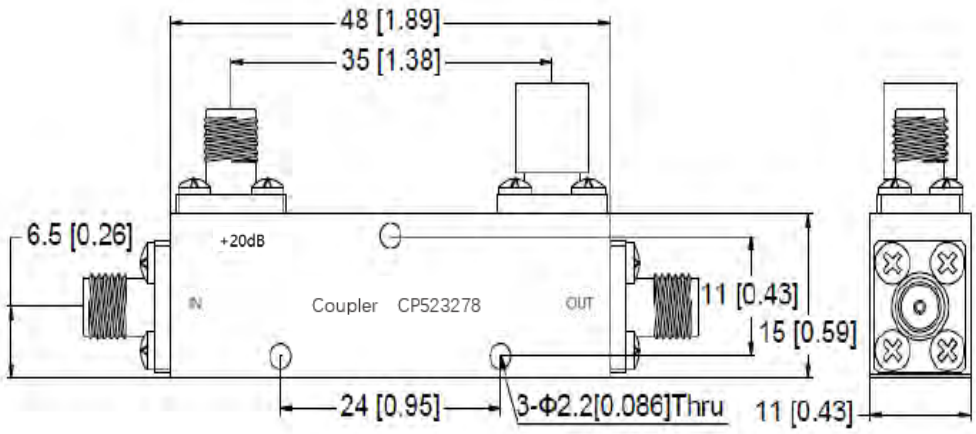

Electrical Specifications	
Operating Frequency	8 – 40 GHz
Input Power	30 W
Coupling	20±1 dB
Directivity	10 dB Max.
Insertion Loss	≤1.3 dB Max.
Amplitude Stability	±1 dB Max.
VSWR	≤1.6
Impedance	50 Ω
Interface	2.92-F
Temperature (Ambient Range)	-40 ℃~ +70 ℃

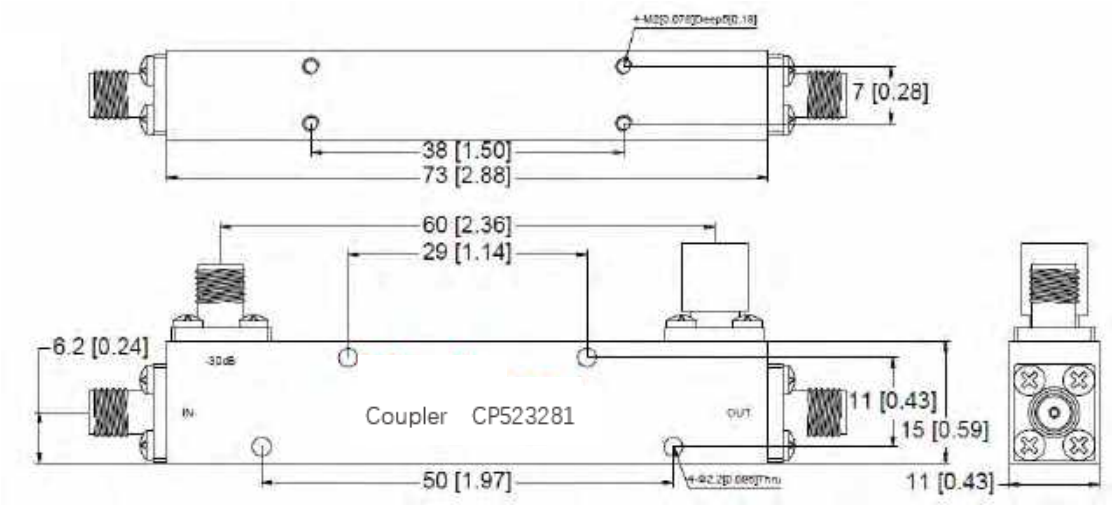

Electrical Specifications	
Operating Frequency	1 - 18 GHz
Input Power	50 W
Coupling	30±1 dB
Frequency Sensitivity	±1 dB Max.
Directivity	12 dB Min.
Insertion Loss	0.8 dB Max.
VSWR	1.6 Max.
Impedance	50 Ω
Interface	SMA-F
Temperature (Ambient Range)	-40℃ ～+70℃

- Gain: 35dB Typical
- Noise Figure: 5dB Typical
- P1dB Output Power: 11dBm Typical
- Supply Voltage: +8V @ 150mA

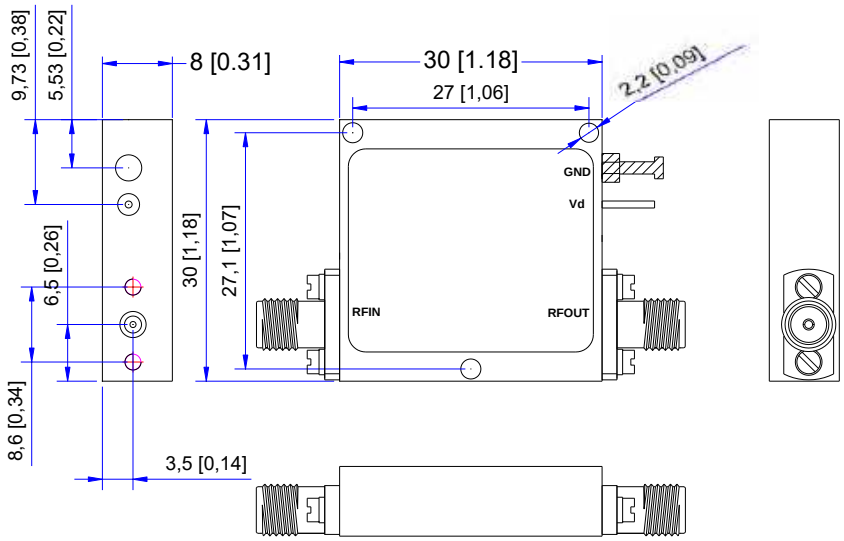

Specifications			
Frequency	50-75 GHz	Output Power (P1dB)	11 dBm Typ.
Gain	35 dB Typ.	Impedance	50 Ω
Gain Flatness	±3.0 dB Typ.	Input Max Power (No Damage)	-20 dBm Max.
Input VSWR	2.5 Typ.	Supply Current (Idd) (Vcc=+8V)	150 mA Typ.
Output VSWR	2.5 Typ.	Input /Output Connector	WR15 UG-385/U
Noise Figure	5dB Typ.	Supply Bais Voltage	+15V
Weight	0.05 kg	Finish	Gold Plated
Material	Aluminum	Operational Temperature	0 ℃ ~ +50 ℃

- Gain: 40dB Typical
- Noise Figure: 3.5dB Typical
- P1dB Output Power: +10dBm Typical
- Supply Voltage: +12V @ 350mA

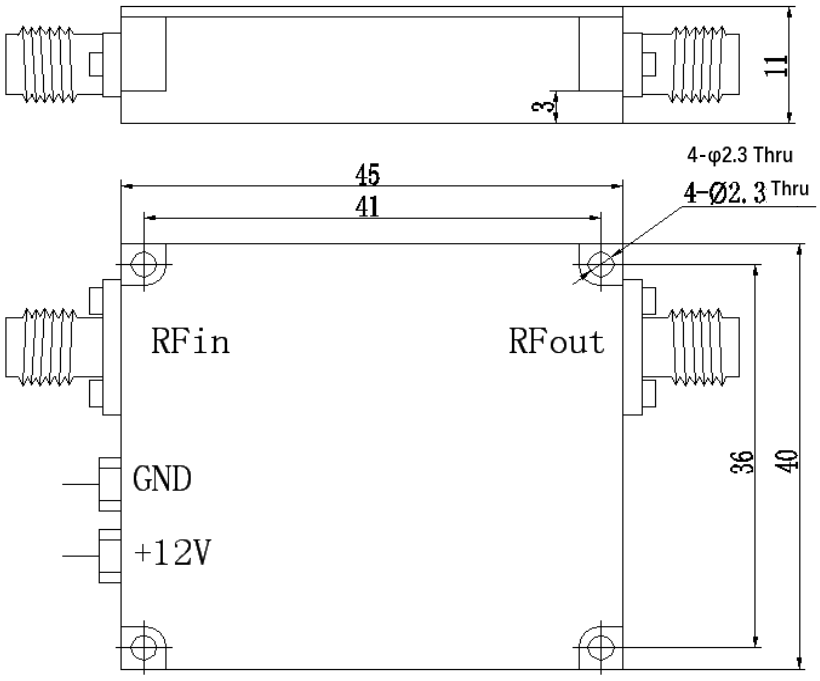

Specifications			
Frequency	0.5-18 GHz	Input /Output Connector	SMA-Female
Gain	⩾40 dB	Input VSWR	1.6 Typ. 2.0 Max.
Gain Flatness	±2.0 dB	Output VSWR	1.5 Typ. 2.0 Max.
Output 1dB Compression Point (P1dB)	10 dBm	Saturated Output Power (Psat)	⩾10 dBm Typ.
Noise Figure	3.5 dB Max.	Stray Suppression	⩾60 dBc
Impedance	50 ohms	Supply Current (Idd) (Vcc=+12V)	350 mA typ.
Weight	0.20 kg	Power Connector	Core Capacitor
Operational Temperature	-30 ℃ ~ +55 ℃	Material	Aluminum
Storage Temperature	-40 ℃~ +70 ℃	Size	45×40×11 mm

- Gain: 40dB Typical
- Noise Figure: 3.5dB Typical
- P1dB Output Power: 8dBm Typical
- Supply Voltage: +12V @ 400mA

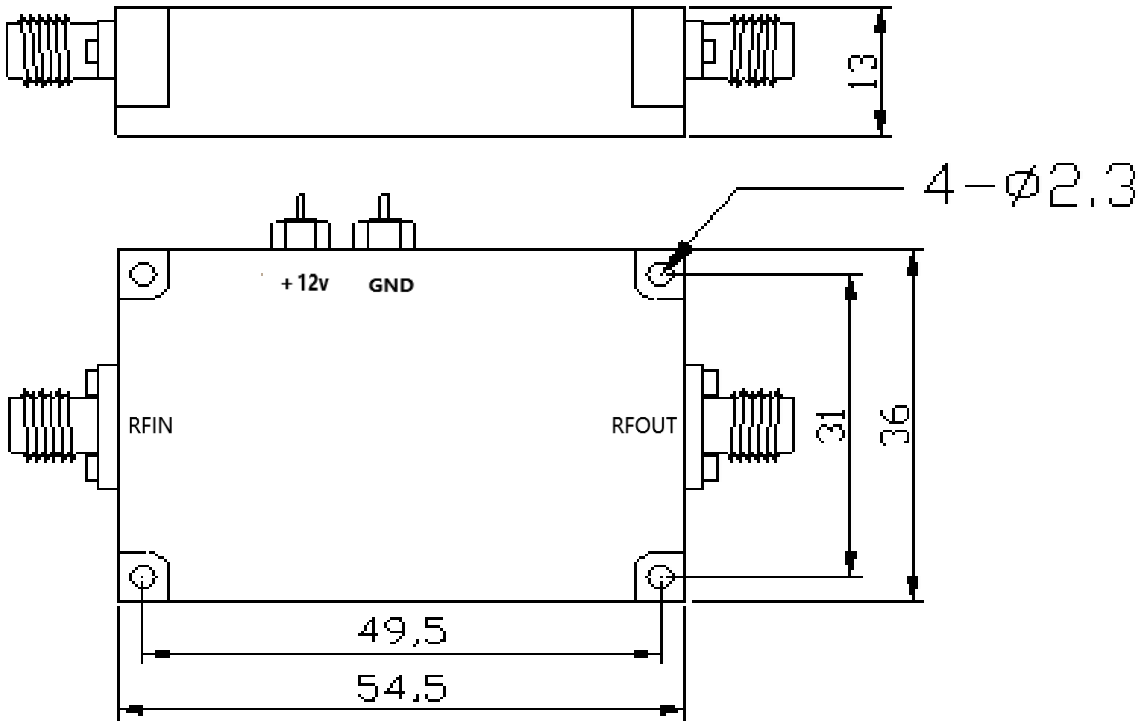

Specifications			
Frequency	18-40 GHz	Input /Output Connector	2.92-Female
Gain	⩾40 dB	Stray Suppression	⩾60 dBc
Gain Flatness	±2.5 dB	Supply Current (Idd) (Vcc=+12V)	400 mA typ.
Output 1dB Compression Point (P1dB)	8 dBm	Power Connector	Core Capacitor
Noise Figure	3.5 dB Typ. 4.0 dB Max.	Material	Aluminum
Impedance	50 ohms	Size	54.5*36*13 mm
Weight	0.20 kg	Material	Aluminum
Operational Temperature	-30 ℃ ~ +55 ℃	Storage Temperature	-40 ℃~ +70 ℃

- Gain: 43dB Typical
- Noise Figure: 5dB Typical
- P1dB Output Power: 18dBm Typical
- Supply Voltage: +12V @ 350mA

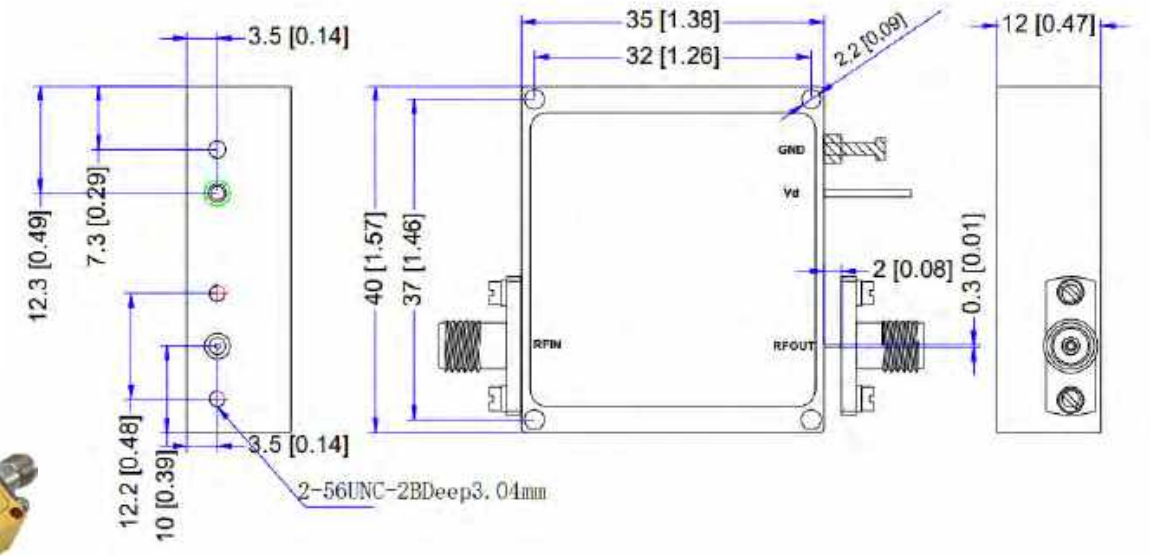

Specifications			
Frequency	0.5-40 GHz	Output Power (P1dB)	18 dBm Typ.
Gain	43 dB Typ.	Output Power (Psat)	21 dBm Typ.
Gain Flatness	±2.5 dB Typ. ±3.5 dB Max.	Input Max Power (No Damage)	-15 dBm Max.
Input VSWR	2.0 Typ 2.5 Max.	Supply Current (Idd) (Vcc=+12V)	350 mA typ.
Output VSWR	2.0 Typ 2.5 Max.	Impedance	50 ohms
Spurious	-60 dBc	Input /Output Connector	2.92mm-Female
Noise Figure	5.0 dB Typ.	Material	Aluminum
Weight	0.03 kg	Package Sealing	General Sealing
Operational Temperature	-45 ℃ ~ +85 ℃	Storage Temperature	-55 ℃~ +125 ℃

- Gain: 35dB Min
- Noise Figure: 1.5dB Max.
- P1dB Output Power: +16dBm Typical
- Supply Voltage: +12V @ 350mA

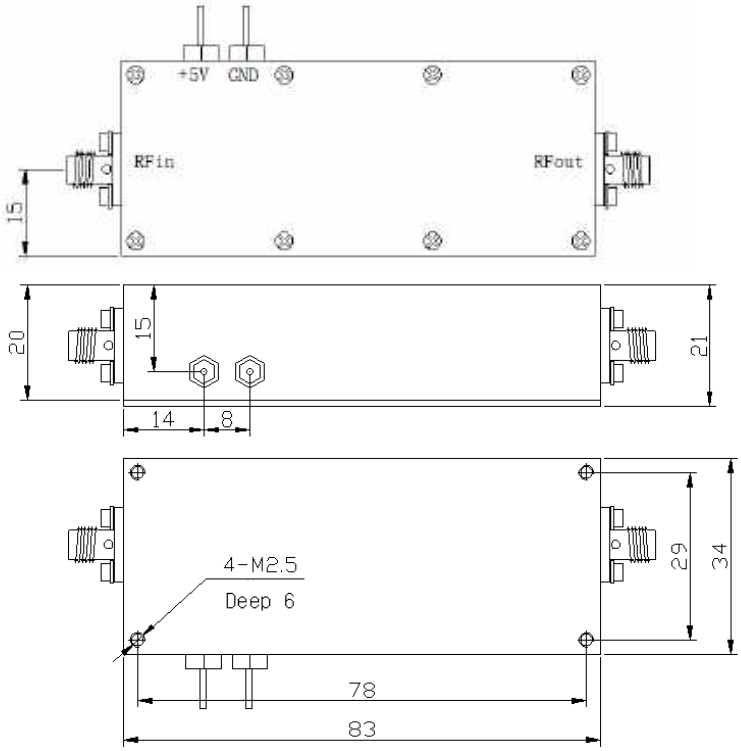

Specifications			
Frequency	0.5-2 GHz	Input /Output Connector	SMA-Female
Gain	35 dB Min.	Input VSWR	1.6 Typ. 2.0 Max.
Gain Flatness	±1.5 dB Max.	Output VSWR	1.5 Typ. 2.0 Max.
Output 1dB Compression Point (P1dB)	16 dBm Typ.	Saturated Output Power (Psat)	18 dBm Typ.
Noise Figure	1.5 dB Max.	Stray Suppression	-60 dBc
Impedance	50 ohms	Supply Current (Dc=+5V)	150 mA Max.
Weight	0.20 kg	Power Connector	Core Capacitor
Operational Temperature	-20 ℃ ~ +55 ℃	Material	Aluminum
Storage Temperature	-40 ℃~ +70 ℃	Size	83×34×21 mm

- Gain: 45dB Typical
- Noise Figure: 4dB Typical
- P1dB Output Power: 17dBm Typical
- Supply Voltage: +12V @ 250mA

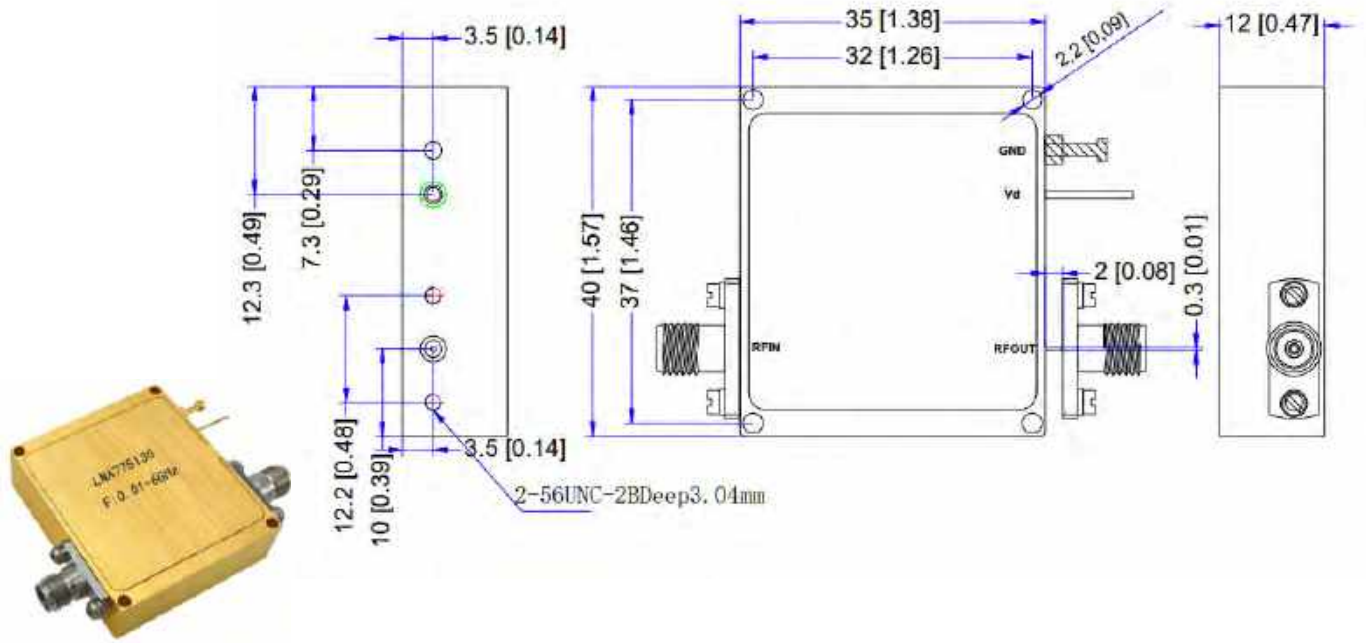

Specifications			
Frequency	0.01-6 GHz	Output Power (P1dB)	17 dBm Typ.
Gain	42 dB Min. 45 dB Typ.	Output Power (Psat)	18 dBm Typ.
Gain Flatness	±1.5 dB Typ. ±2.0 dB Max.	Input Max Power (No Damage)	-25 dBm Max.
Input VSWR	2.0 Typ	Output IP3	25 dBm Typ.
Output VSWR	2.0 Typ	Supply Current (Idd) (Vcc=+12V)	250 mA typ.
Spurious	-60 dBc	Impedance	50 ohms
Noise Figure	4.0 dB Typ. 5.0 dB Max.	Input /Output Connector	SMA-Female
Weight	0.05 kg	Supply Bais Voltage	+15V
Material	Aluminum	Package Sealing	General Sealing
Operational Temperature	-45 ℃ ~ +85 ℃	Storage Temperature	-55 ℃~ +125 ℃

- Gain: 30dB Typical
- Noise Figure: 6dB Typical
- P1dB Output Power: 16dBm Typical
- Supply Voltage: +12V @ 200mA

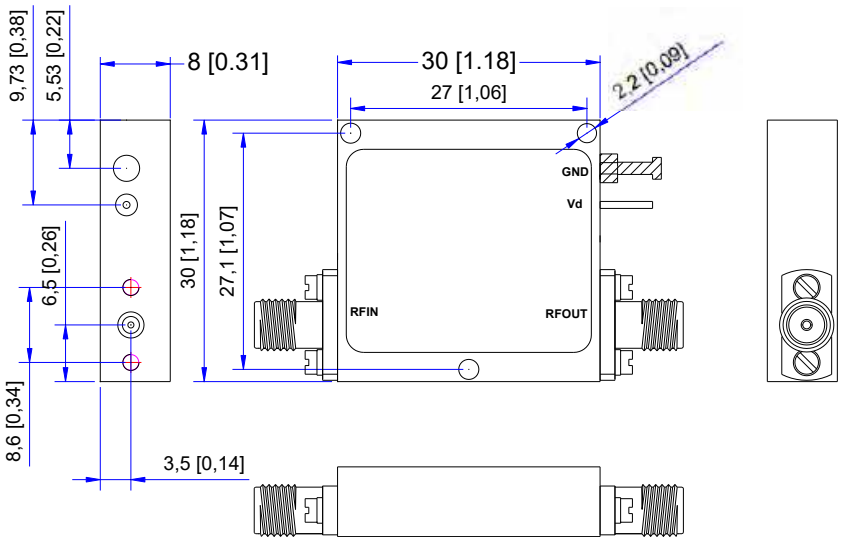

Specifications			
Frequency	40-60 GHz	Output Power (P1dB)	16 dBm Typ.
Gain	25 dB Min. 30 dB Typ.	Impedance	50 Ω
Gain Flatness	±2.5 dB Typ.	Input Max Power (No Damage)	15 dBm Max.
Input VSWR	2.0 Typ	Output IP3	20 dBm Typ.
Output VSWR	2.0 Typ	Supply Current (Idd) (Vcc=+12V)	200 mA Typ.
Noise Figure	6dB	Input /Output Connector	1.85-Removable
Weight	0.05 kg	Supply Bais Voltage	+15V
Material	Aluminum	Finish	Gold Plated
Operational Temperature	-45 ℃ ~ +85 ℃	Storage Temperature	-55 ℃~ +125 ℃

- Gain: 16dB Typical
- Noise Figure: 1.5dB Typical
- P1dB Output Power: 18dBm Min.
- Supply Voltage: +12V @ 140mA

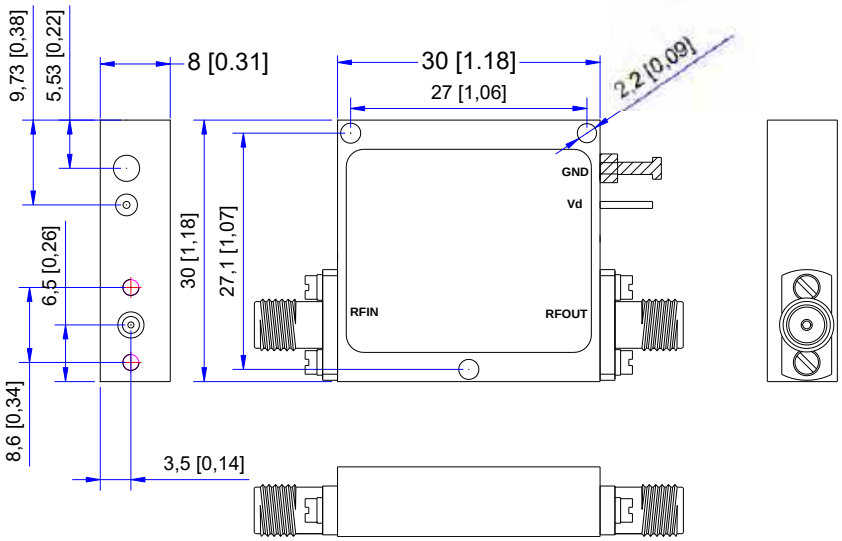

Specifications			
Frequency	0.01-1 GHz	Output Power (P1dB)	18 dBm Min.;21dBm Max.
Gain	15 dB Min. 16 dB Typ.	Saturated Output Power (Psat)	19 dBm Typ.
Gain Flatness	±1 dB Max.	OIP3	27 dBm Min.;30 dBm Typ.
Input VSWR	1.6 Typ; 2.0 Max.	Impedance	50 Ω
Output VSWR	1.6 Typ; 2.0 Max.	Input Max Power (No Damage)	5 dBm Max.
Noise Figure	1.5 dB Typ.;2dB Max.	Reverse Isolation	25 dB Min.
Spurious	-60 dBc	Supply Current (Idd) (Vcc=+12V)	140 mA Typ.
Weight	0.03 kg	Input /Output Connector	SMA-F
Material	Aluminum	Supply Bais Voltage	+15V
Finish	Gold Plated	Package Sealing	General Sealing
Operational Temperature	-45 ℃ ~ +85 ℃	Storage Temperature	-55 ℃~ +125 ℃

- Gain: 20dB Typical
- Noise Figure: 6dB Typical
- P1dB Output Power: 20dBm Typical
- Supply Voltage: +12V @ 400mA

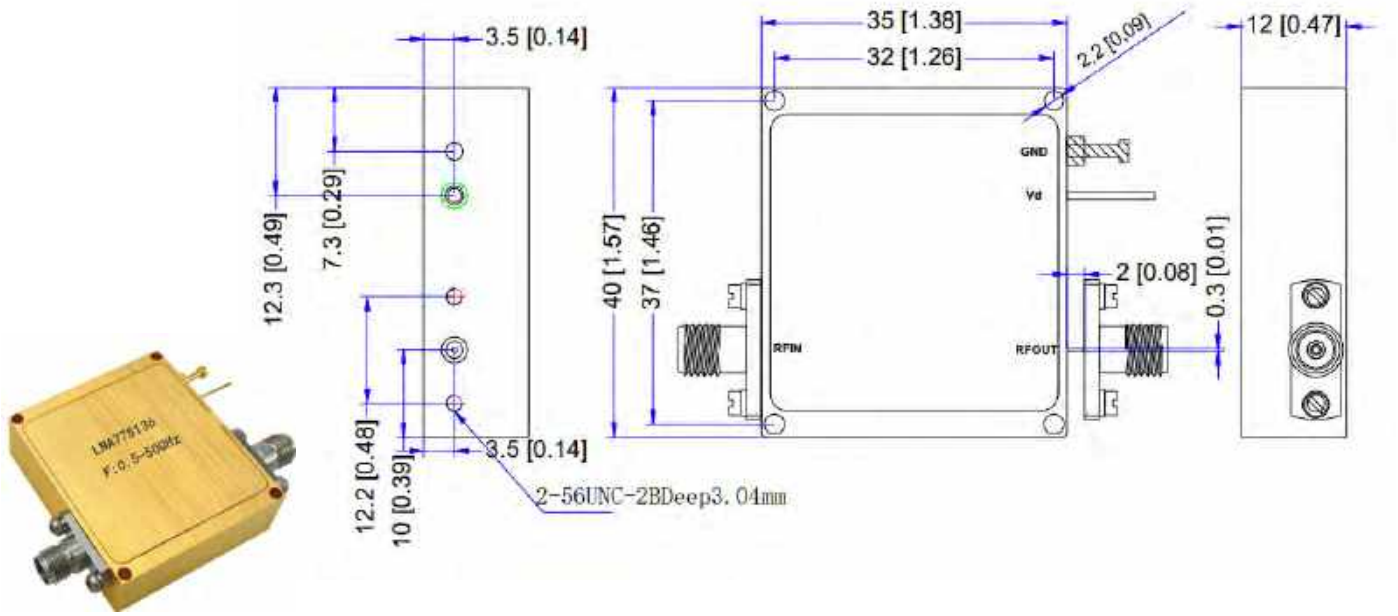

Specifications			
Frequency	0.5-50 GHz	Output Power (P1dB)	10 dBm Typ.
Gain	18 dB Min. 20 dB Typ.	Output Power (Psat)	12 dBm Typ.
Gain Flatness	±3.0 dB Typ. ±4.0 dB Max.	Output IP3	16 dBm Typ.
Input VSWR	1.8 Typ 2.5 Max.	Input Max Power (No Damage)	-10 dBm Max.
Output VSWR	1.8 Typ 2.5 Max.	Supply Current (Idd) (Vcc=+12V)	400 mA typ.
Spurious	-60 dBc	Impedance	50 ohms
Noise Figure	6.0 dB Typ.	Input /Output Connector	2.4mm-Female
Material	Aluminum	Weight	0.05 kg
Operational Temperature	-45 ℃ ~ +85 ℃	Storage Temperature	-55 ℃~ +125 ℃

- Gain: 38dB Typical
- Noise Figure: 2dB Typical
- P1dB Output Power: 21dBm Typical
- Supply Voltage: +12V @ 200mA

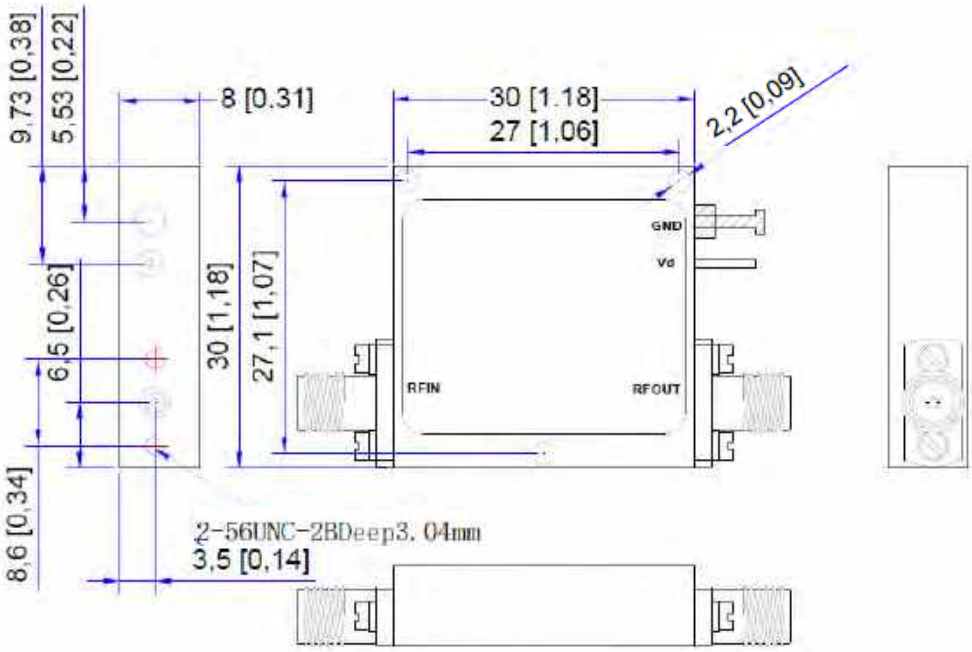

Specifications			
Frequency	14-27 GHz	Output Power (P1dB)	19 dBm Min. 21 dBm Typ.
Gain	35 dB Min. 38 dB Typ.	Output Power (Psat)	21 dBm Typ.
Gain Flatness	±1.5 dB Typ.	Output IP3	25 dBm Typ.
Input VSWR	1.8 Typ	Input Max Power (No Damage)	-15 dBm Max.
Output VSWR	1.8 Typ	Supply Current (Idd) (Vcc=+12V)	200 mA typ.
Spurious	-60 dBc	Impedance	50 ohms
Noise Figure	2.0 dB Typ.	Input /Output Connector	2.92mm-Female
Material	Aluminum	Weight	0.05 kg
Operational Temperature	-45 ℃ ~ +85 ℃	Storage Temperature	-55 ℃~ +125 ℃

- Gain: 28dB Typical
- Noise Figure: 2.3dB Typical
- P1dB Output Power: 25dBm Typical
- Supply Voltage: +12V @ 500mA

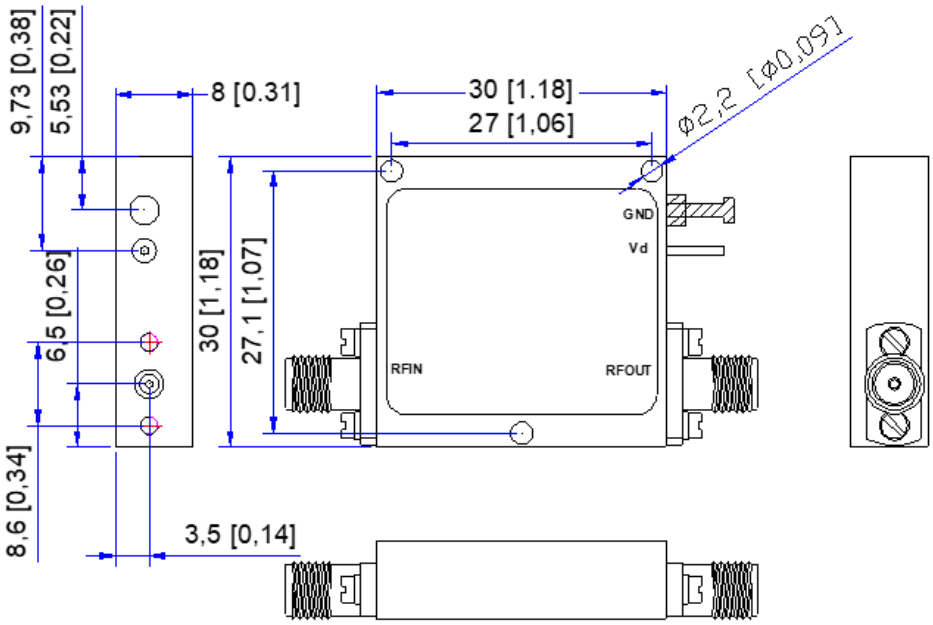

Specifications			
Frequency	1-18 GHz	Output Power (P1dB)	25 dBm Typ.
Gain	25 dB Min. 28 dB Typ.	Output Power (Psat)	26 dBm Typ.
Gain Flatness	±1.5 dB Typ. ±2.0 dB Max.	Output IP3	35 dBm Typ.
Input VSWR	1.6 Typ 2.0 Max.	Input Max Power (No Damage)	5 dBm Max.
Output VSWR	1.6 Typ 2.0 Max.	Supply Current (Idd) (Vcc=+12V)	500 mA typ.
Spurious	-60 dBc	Impedance	50 ohms
Noise Figure	2.3 dB Typ. 2.7 dB Max.	Input /Output Connector	SMA-Female
Material	Aluminum	Weight	0.05 kg
Operational Temperature	-45 ℃ ~ +85 ℃	Storage Temperature	-55 ℃~ +125 ℃

- Gain: 45dB Typical
- Noise Figure: 4dB Typical
- P1dB Output Power: 17dBm Typical
- Supply Voltage: +12V @ 250mA

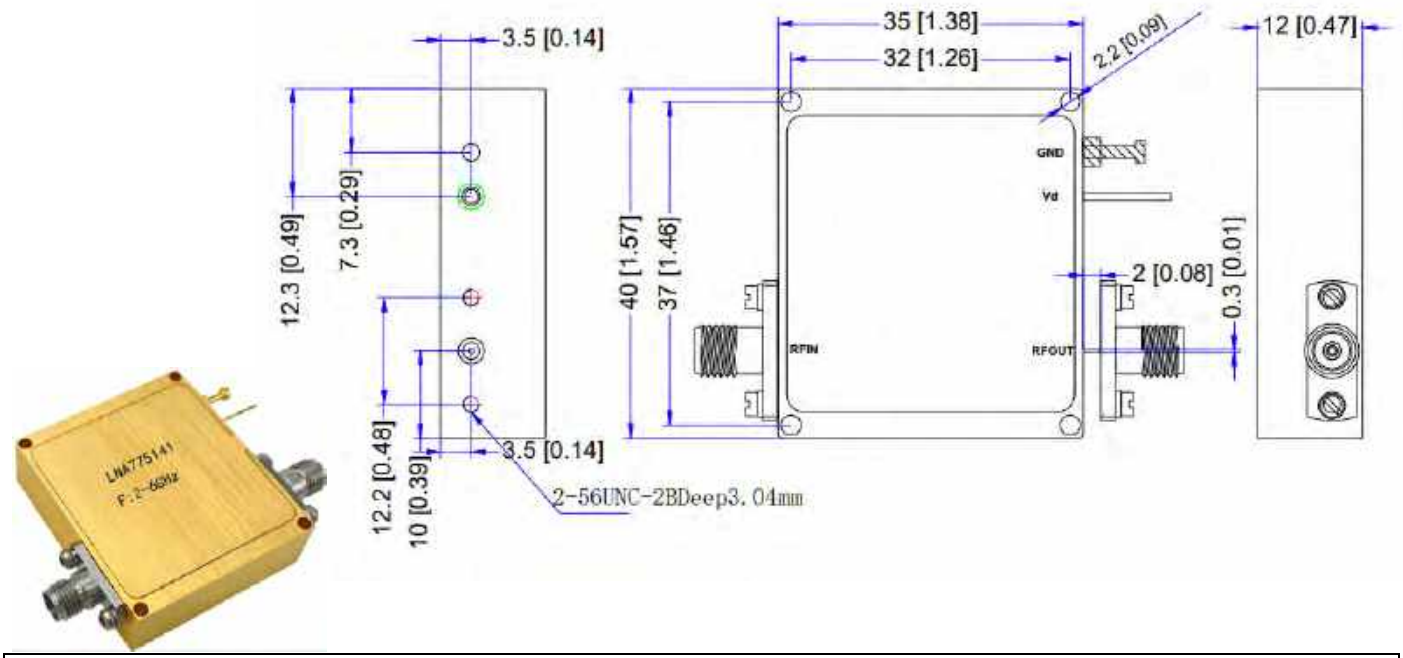

Specifications			
Frequency	2-6 GHz	Output Power (P1dB)	17 dBm Typ.
Gain	42 dB Min. 45 dB Typ.	Output Power (Psat)	18 dBm Typ.
Gain Flatness	±1.5 dB Typ. ±2.0 dB Max.	Input Max Power (No Damage)	-25 dBm Max.
Input VSWR	2.0 Typ	Output IP3	25 dBm Typ.
Output VSWR	2.0 Typ	Supply Current (Idd) (Vcc=+12V)	250 mA typ.
Spurious	-60 dBc	Impedance	50 ohms
Noise Figure	4.0 dB Typ. 5.0 dB Max.	Input /Output Connector	SMA-Female
Weight	0.05 kg	Supply Bais Voltage	+15V
Material	Aluminum	Package Sealing	General Sealing
Operational Temperature	-45 ℃ ~ +85 ℃	Storage Temperature	-55 ℃~ +125 ℃

- Gain: 40dB Typical
- Noise Figure: 4dB Typical
- P1dB Output Power: 18dBm Min.
- Supply Voltage: +12V @ 350mA

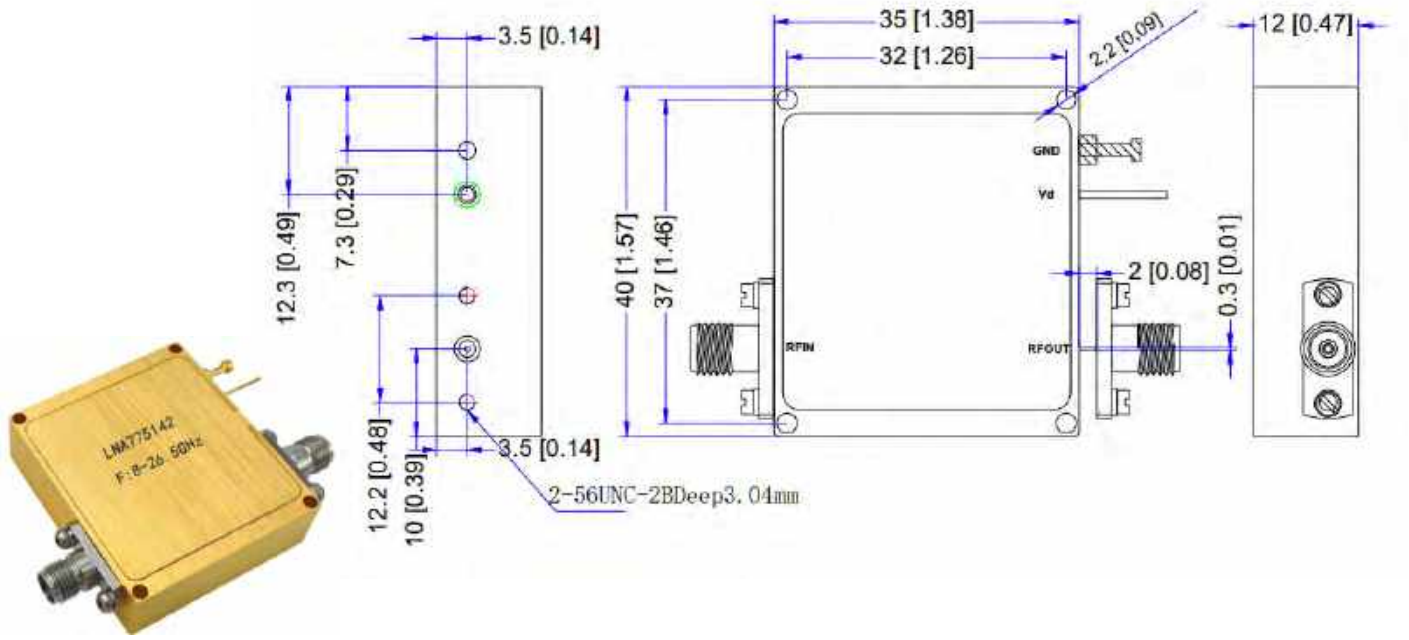

Specifications			
Frequency	8-26.5 GHz	Output Power (P1dB)	18 dBm Min.
Gain	40 dB Typ.	Output Power (Psat)	21 dBm Min.
Gain Flatness	±1.5 dB Typ. ±2.0 dB Max.	Input Max Power (No Damage)	0 dBm Max.
Input VSWR	1.5 Typ 2.0 Max.	Supply Current (Idd) (Vcc=+12V)	350 mA Typ.
Output VSWR	1.8 Typ 2.5 Max.	Impedance	50 ohms
Spurious	-60 dBc	Input /Output Connector	2.92mm-Female
Noise Figure	4.0 dB Typ. 6.0 dB Max.	Material	Aluminum
Weight	0.03 kg	Package Sealing	General Sealing
Operational Temperature	-45 ℃ ~ +85 ℃	Storage Temperature	-55 ℃~ +125 ℃

- Gain: 30dB Typical
- Noise Figure: 4dB Typical
- P1dB Output Power: 25dBm Typical
- Supply Voltage: +12V @ 500mA

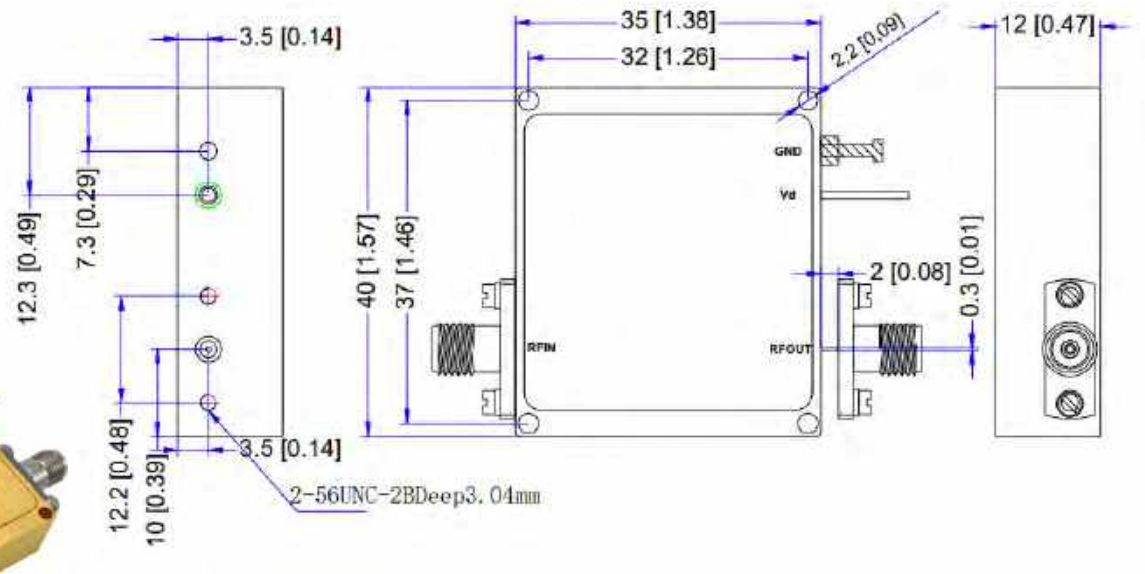

Specifications			
Frequency	0.3-18 GHz	Output Power (P1dB)	24 dBm Min. 25 dBm Typ.
Gain	30 dB Typ.	Output Power (Psat)	26 dBm Typ.
Gain Flatness	±2.0 dB Max.	Output IP3	30 dBm Typ.
Input VSWR	1.5 Typ 2.0 Max.	Input Max Power (No Damage)	0 dBm Max.
Output VSWR	1.8 Typ 2.5 Max.	Supply Current (Idd) (Vcc=+12V)	500 mA typ.
Spurious	-60 dBc	Impedance	50 ohms
Noise Figure	4.0 dB Typ. 5.5 dB Max.	Input /Output Connector	SMA-Female
Material	Aluminum	Weight	0.05 kg
Operational Temperature	-45 ℃ ~ +85 ℃	Storage Temperature	-55 ℃~ +125 ℃

- Gain: 33dB Typical
- Noise Figure: 4dB Typical
- P1dB Output Power: 26dBm Typical
- Supply Voltage: +12V @ 500mA

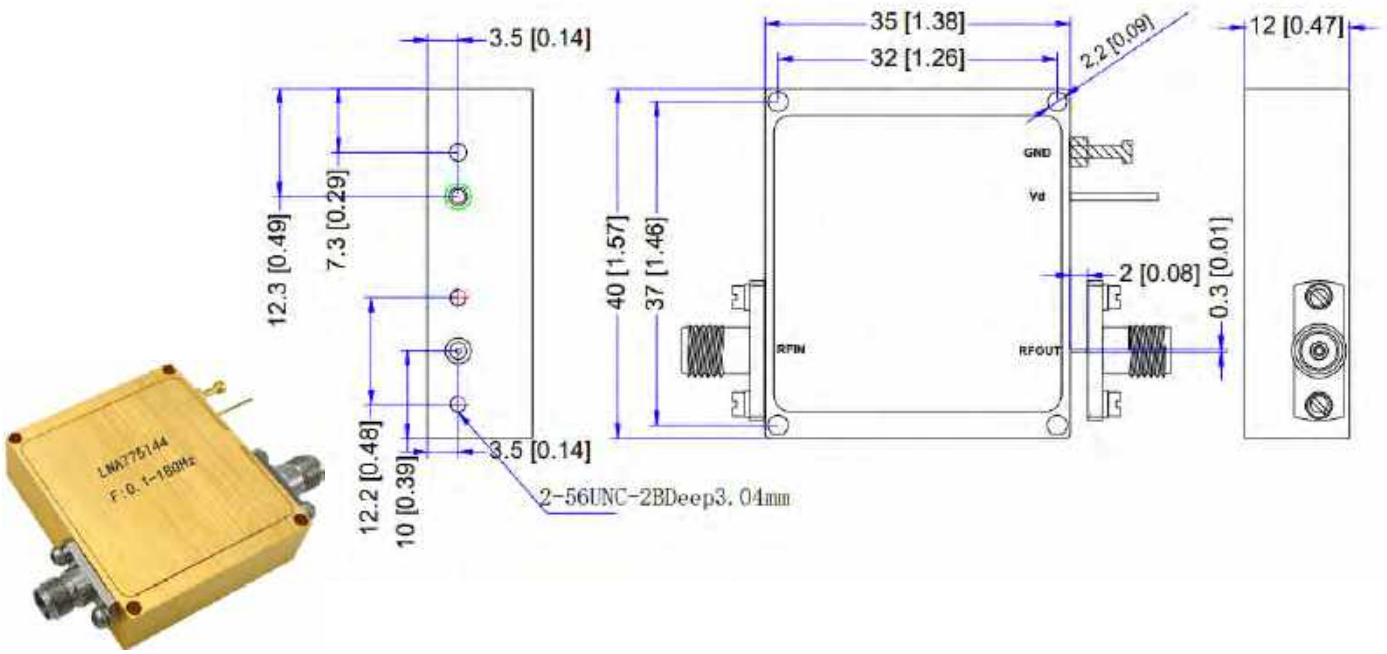

Specifications			
Frequency	0.1-18 GHz	Output Power (P1dB)	25 dBm Min. 26 dBm Typ.
Gain	33 dB Typ.	Output Power (Psat)	27 dBm Typ.
Gain Flatness	±3.0 dB Max.	Output IP3	32 dBm Typ.
Input VSWR	1.5 Typ 2.0 Max.	Input Max Power (No Damage)	+3 dBm Max.
Output VSWR	1.8 Typ 2.5 Max.	Supply Current (Idd) (Vcc=+12V)	500 mA typ.
Spurious	-60 dBc	Impedance	50 ohms
Noise Figure	4.0 dB Typ. 5.5 dB Max.	Input /Output Connector	SMA-Female
Material	Aluminum	Weight	0.05 kg
Operational Temperature	-45 ℃ ~ +85 ℃	Storage Temperature	-55 ℃~ +125 ℃

- Gain: 25dB Typical
- Noise Figure: 3.5dB Max.
- P1dB Output Power: 17dBm Typical
- Supply Voltage: +12V @ 500mA

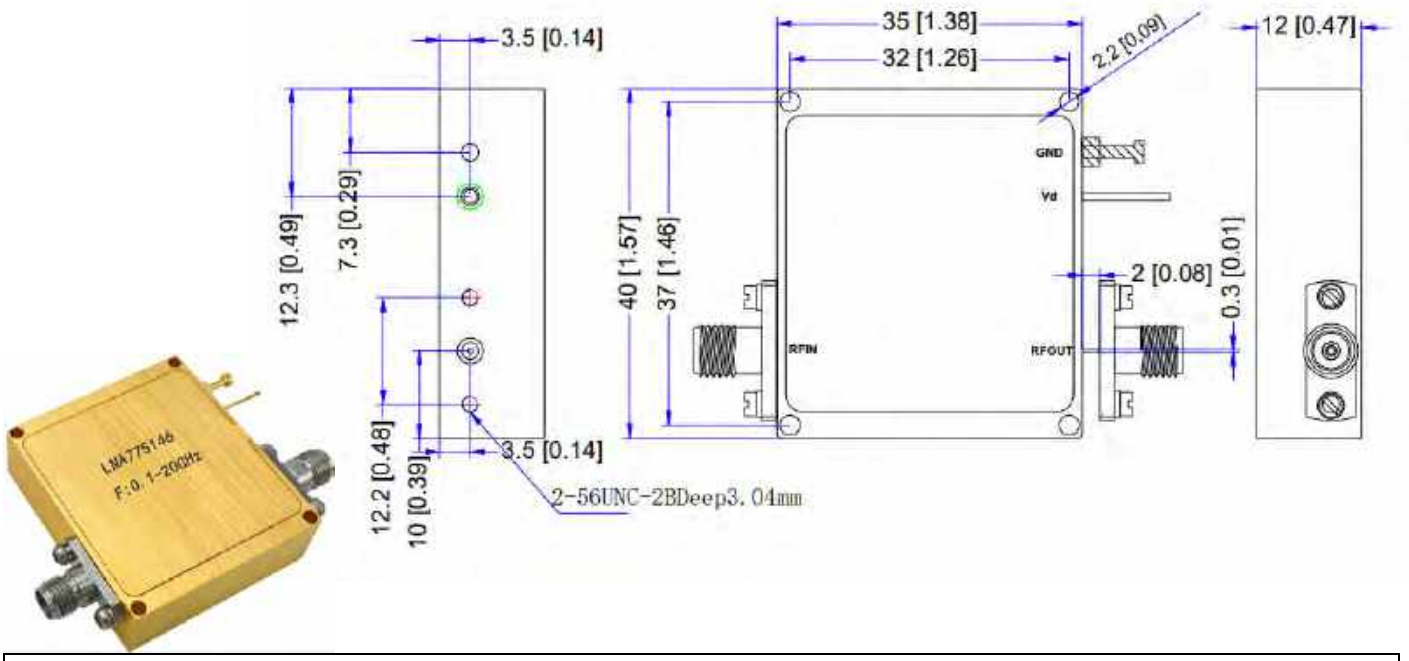

Specifications			
Frequency	0.1-20 GHz	Output Power (P1dB)	15 dBm Min. 17 dBm Typ.
Gain	25 dB Typ.	Output Power (Psat)	19 dBm Typ.
Gain Flatness	±3.0 dB Max.	Output IP3	25 dBm Typ.
Input VSWR	1.5 Typ 2.0 Max.	Input Max Power (No Damage)	10 dBm Max.
Output VSWR	1.8 Typ 2.0 Max.	Supply Current (Idd) (Vcc=+12V)	500 mA typ.
Spurious	-60 dBc	Impedance	50 ohms
Noise Figure	3.5 dB Max.	Input /Output Connector	SMA-Female
Material	Aluminum	Weight	0.05 kg
Operational Temperature	-45 ℃ ~ +85 ℃	Storage Temperature	-55 ℃~ +125 ℃

- Gain: 30dB Typical
- Noise Figure: 3.5dB Max.
- P1dB Output Power: 12dBm Typical
- Supply Voltage: +12V @ 500mA

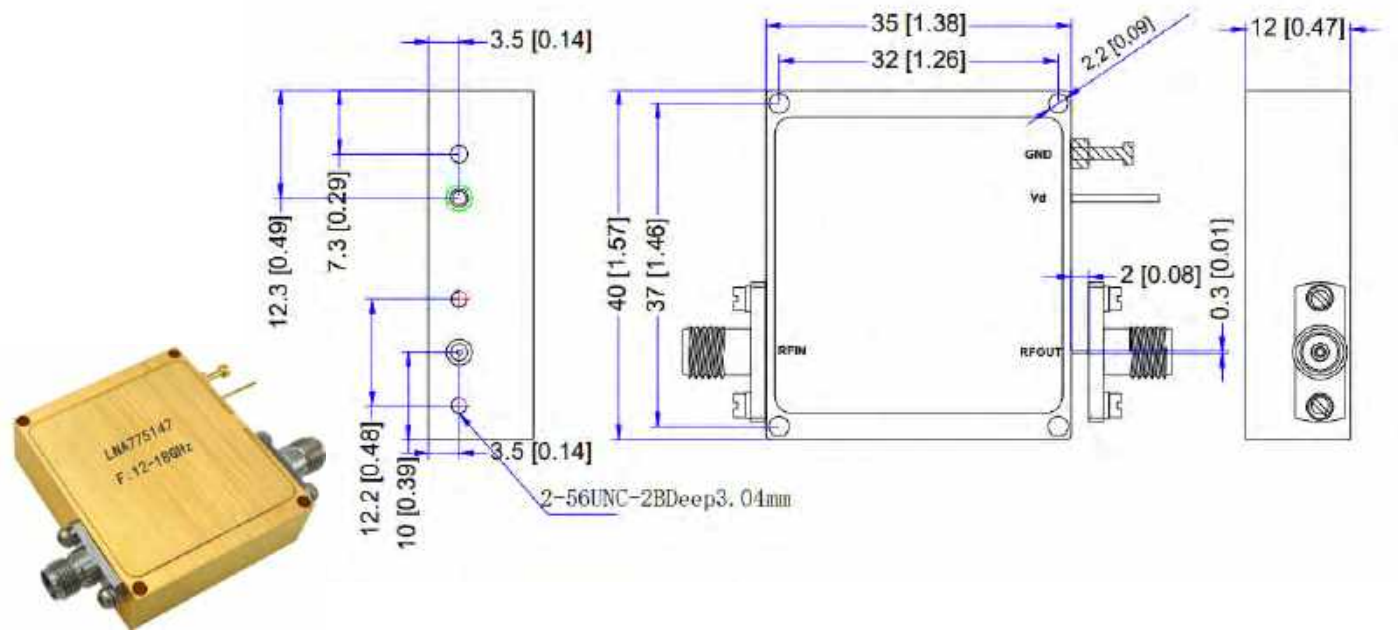

Specifications			
Frequency	12-18 GHz	Output Power (P1dB)	10 dBm Min. 12 dBm Typ.
Gain	30 dB Typ.	Output Power (Psat)	13 dBm Typ.
Gain Flatness	±2.0 dB Max.	Output IP3	16 dBm Typ.
Input VSWR	1.5 Typ 1.8 Max.	Input Max Power (No Damage)	10 dBm Max.
Output VSWR	1.5 Typ 1.8 Max.	Supply Current (Idd) (Vcc=+12V)	500 mA typ.
Spurious	-60 dBc	Impedance	50 ohms
Noise Figure	3.5 dB Max.	Input /Output Connector	SMA-Female
Material	Aluminum	Weight	0.05 kg
Operational Temperature	-45 ℃ ~ +85 ℃	Storage Temperature	-55 ℃~ +125 ℃

- Gain: 50dB Typical
- Noise Figure: 2.5dB Typical
- P1dB Output Power: 15dBm Typical
- Supply Voltage: +12V @ 120mA

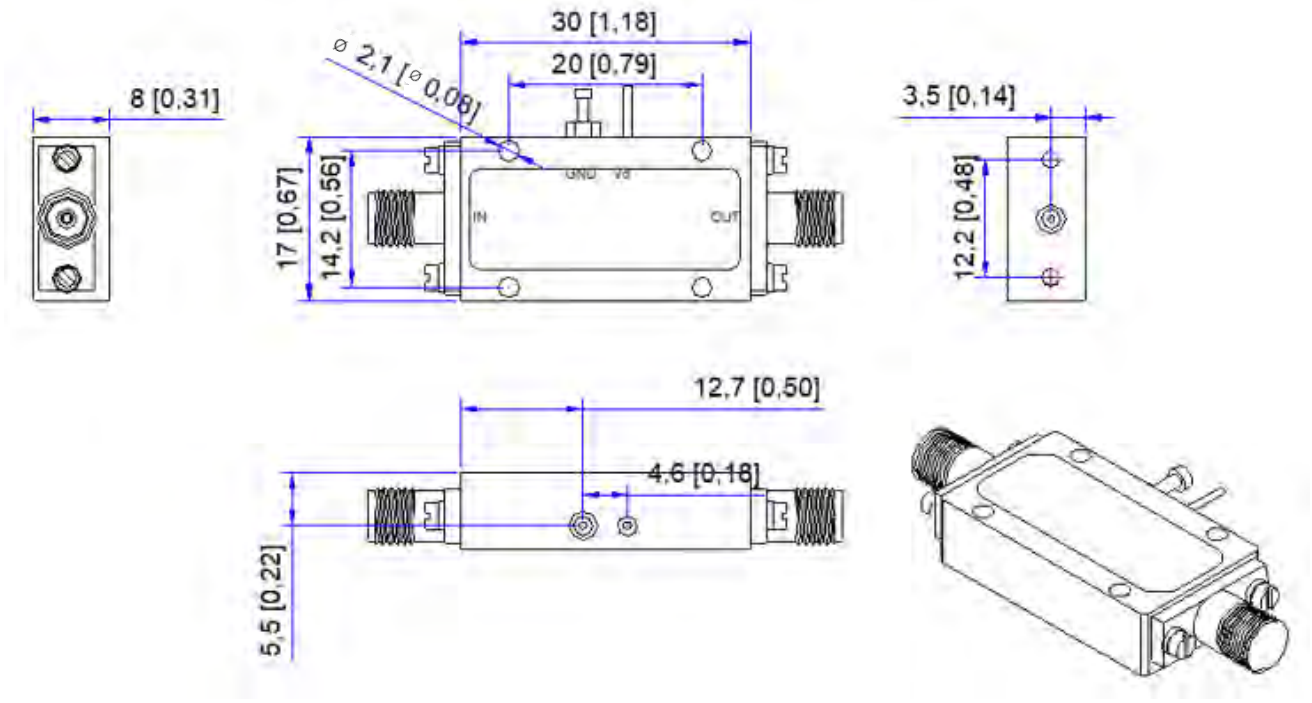

Specifications			
Frequency	4-18 GHz	Output Power (P1dB)	15 dBm Typ.
Gain	50 dB Typ.	Output Power (Psat)	16 dBm Typ.
Gain Flatness	±2.0 dB Typ. ±3.0 dB Max.	Output IP3	22 dBm Typ.
Input VSWR	1.7 Typ 2.0 Max.	Input Max Power (No Damage)	-20 dBm Max.
Output VSWR	1.7 Typ 2.0 Max.	Supply Current (Idd) (Vcc=+12V)	120 mA Typ.
Spurious	-60 dBc	Impedance	50 ohms
Noise Figure	2.5 dB Typ. 3.0 dB Max.	Input /Output Connector	SMA-Female
Material	Aluminum	Weight	0.05 kg
Operational Temperature	-45 ℃ ~ +85 ℃	Storage Temperature	-55 ℃~ +125 ℃

- Gain: 45dB Typical
- Noise Figure: 3dB Typical
- P1dB Output Power: 17dBm Typical
- Supply Voltage: +12V @ 250mA

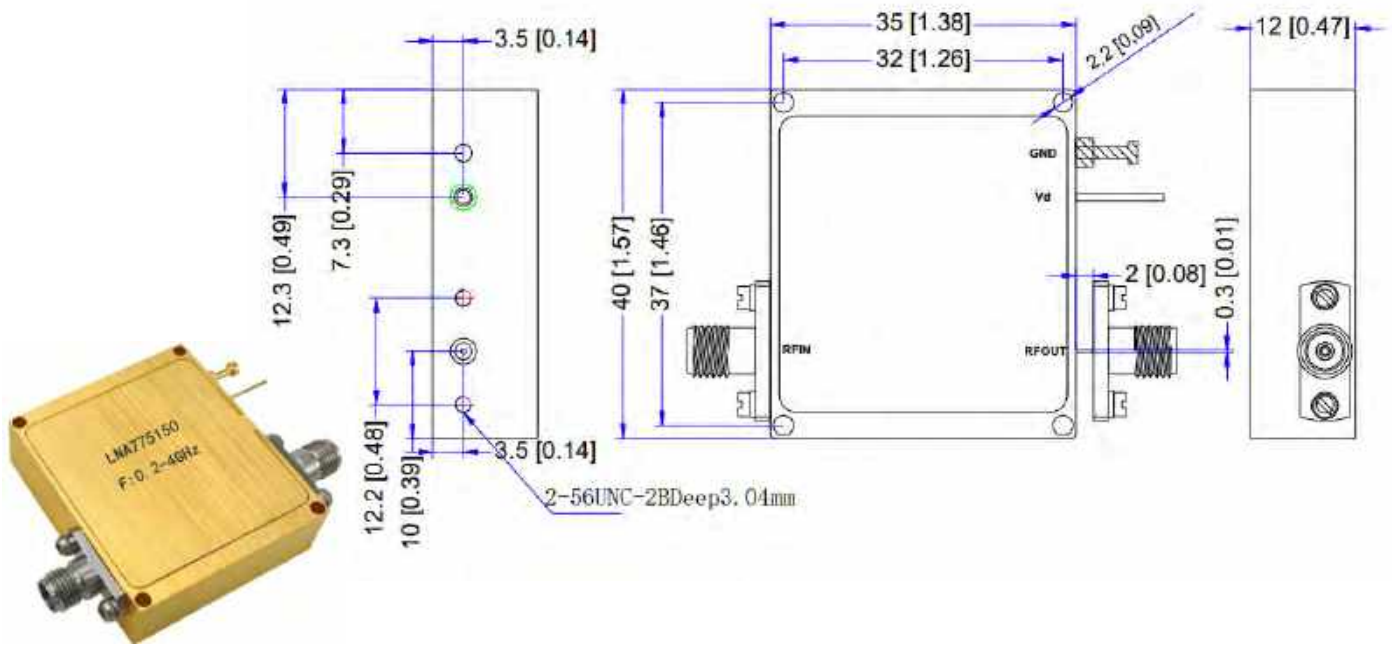

Specifications			
Frequency	0.2-4 GHz	Output Power (P1dB)	17 dBm Typ.
Gain	42 dB Min. 45 dB Typ.	Output Power (Psat)	18 dBm Typ.
Gain Flatness	±1.5 dB Typ. ±2.0 dB Max.	Input Max Power (No Damage)	-25 dBm Max.
Input VSWR	2.0 Typ	Output IP3	25 dBm Typ.
Output VSWR	2.0 Typ	Supply Current (Idd) (Vcc=+12V)	250 mA typ.
Spurious	-60 dBc	Impedance	50 ohms
Noise Figure	3.0 dB Typ. 4.0 dB Max.	Input /Output Connector	SMA-Female
Weight	0.05 kg	Supply Bais Voltage	+15V
Material	Aluminum	Package Sealing	General Sealing
Operational Temperature	-45 ℃ ~ +85 ℃	Storage Temperature	-55 ℃~ +125 ℃

- Gain: 18dB Min.
- Noise Figure: 4dB Typical
- P1dB Output Power: -1dBm Min.
- Supply Voltage: +6V @ 70mA

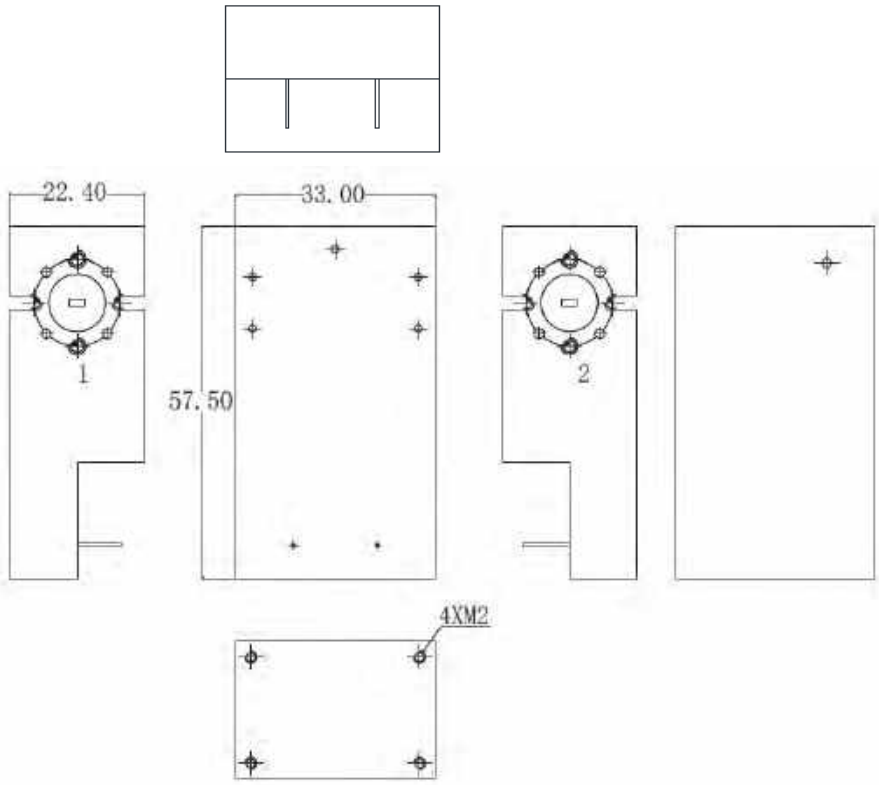

Dimension:mm

Specifications			
Frequency	75-110 GHz	Input Max Power (No Damage)	-10 dBm Max.
Gain	18 dB Min. 20 dB Typ.	Supply Current (Idd) (Vcc=+6V)	70 mA Typ.
Noise Figure	4.0 dB Typ. 6.0 dB Max.	Input Interface	WR-10
Output 1dB Compression Point (P1dB)	-1 dBm Min.	Output Interface	WR-10
Input VSWR	2.5 dB Typ.	Material	Copper
Output VSWR	2.5 dB Typ.	Finish	Gold Plated
Operational Temperature	0 ℃ ~ +50 ℃	Weight	0.20 kg
Storage Temperature	-55 ℃ ~ +85 ℃		

- Frequency range: 50-350GHz
- Lowest Available Noise Figure
- High P1dB

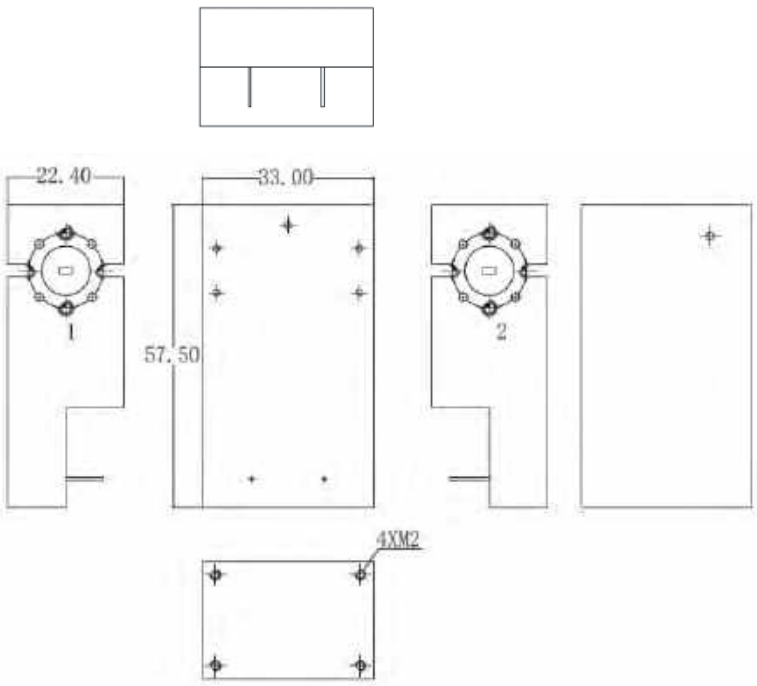

Part Number	Frequency GHz	Gain dB Typical	Noise Figure dB Typical	Waveguide	Standard Flange
LNA775163	50-75	15	4.0	WR15	UG 385/U
LNA775164	60-90	15	5.0	WR12	UG 387/U-M
LNA775165	75-110	18	3.5	WR10	UG 387/U-M
LNA775166	75-110	40	3.5	WR10	UG 387/U-M
LNA775167	110-170	15	4.5 @ 145 GHz	WR06	UG 387/U-M
LNA775168	140-220	20	7.5 Mid Band	WR05	UG 387/U-M
LNA775169	210-260	18	7.5	WR04	UG 387/U-M
LNA775170	250-350	25	12	WR03	UG 387/U-M
LNA775171	250-350	25	12	WR2.8	UG 387/U-M

Reference Curve @ 25℃

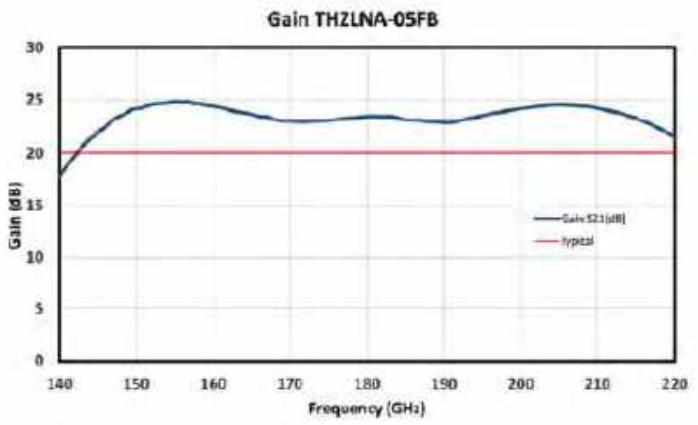

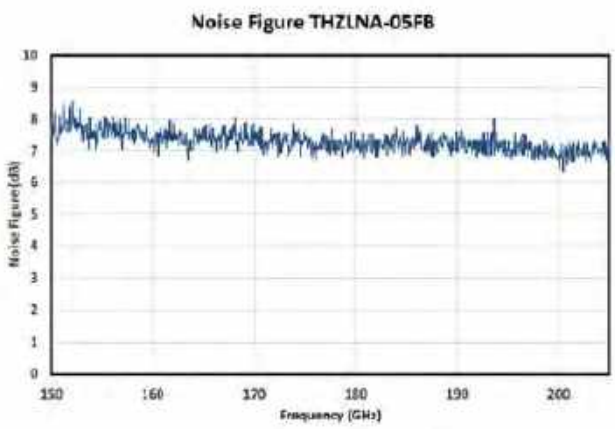

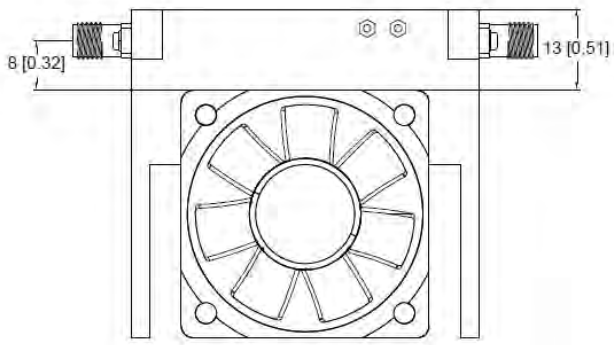

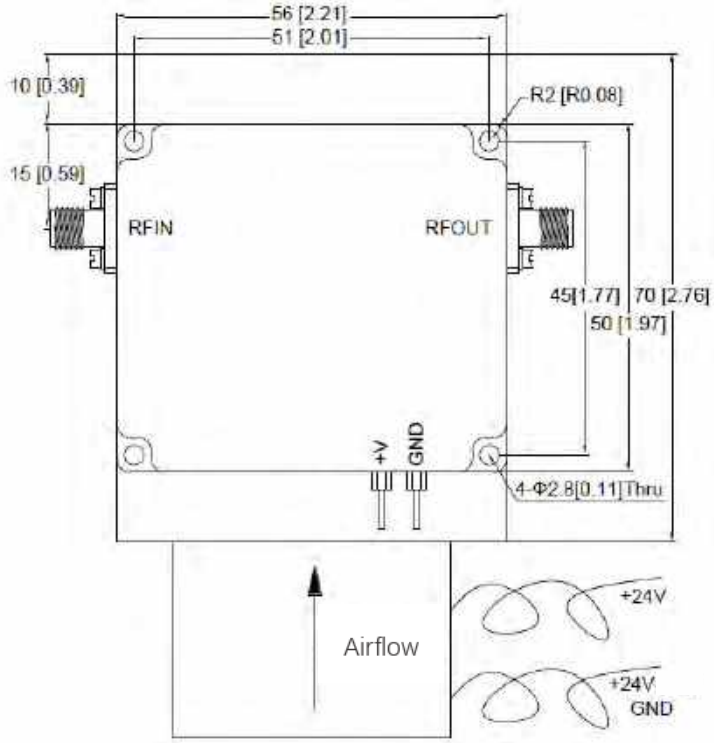

Specifications				
Frequency		26.5 GHz-40 GHz		
Gain		33 dB Min.		
Operating Mode		Continuous Wave		
Saturated Output		33 dBm Min. @ Input 0 dBm		
P1dB		27 dBm Min, 30 dBm Typ.		
DC Supply Current		Item	Define	Current
	Feedthru Capacitor	+V	+12V	⩽2.5A
	Feedthru Capacitor	GND	Reference Ground	
Operating Temperature		-20˚C ~ +50˚C		
Input Connector		2.92-female		
Output Connector		2.92-female		
Bias		Solder Pin		
Size		56 X 50 X 13 mm		
Material		Aluminum		
Material Contact Finish		Gold Plated		
Weight		0.05 kg		
Cooling Requirements		Air-cooled		
Fan Voltage		24V		

Remarks:

- **When the amplifier is handle high power,the amplifier output must be added loaded,or it will burn down.**
- **+12V GND and +24V reference GND,can not be connected together,otherwise amplifier interference.**

- Gain: ⩾30dB Typical
- Supply Voltage: +12V @ 1000mA

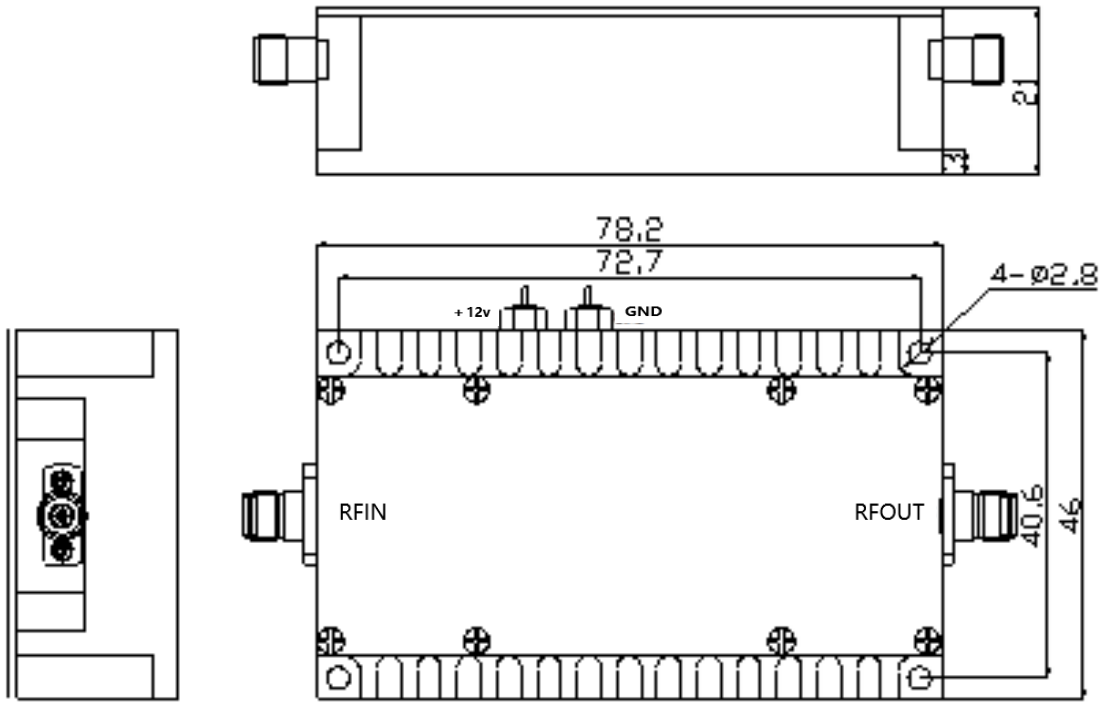

Specifications			
Frequency	2-18 GHz	Input /Output Connector	SMA-Female
Gain	⩾30dB	Input VSWR	1.6 Typ. 2.5 Max.
Gain Flatness	±2.0 dB	Output VSWR	1.5 Typ. 2.5 Max.
Output Power	⩾27 dBm ⩽30 dBm	Stray Suppression	⩾60 dBc
Impedance	50 ohms	Supply Current (Idd) (Vcc=+12V)	1000 mA typ.
Weight	0.05 kg	Power Connector	Core Capacitor
Operational Temperature	-30 ℃ ~ +55 ℃	Material	Aluminum
Storage Temperature	-40 ℃~ +70 ℃	Size	78.2×46×21 mm

- Gain: ⩾30dB Typical
- P1dB Output Power: +25dBm Typical
- Supply Voltage: +12V @ 600mA

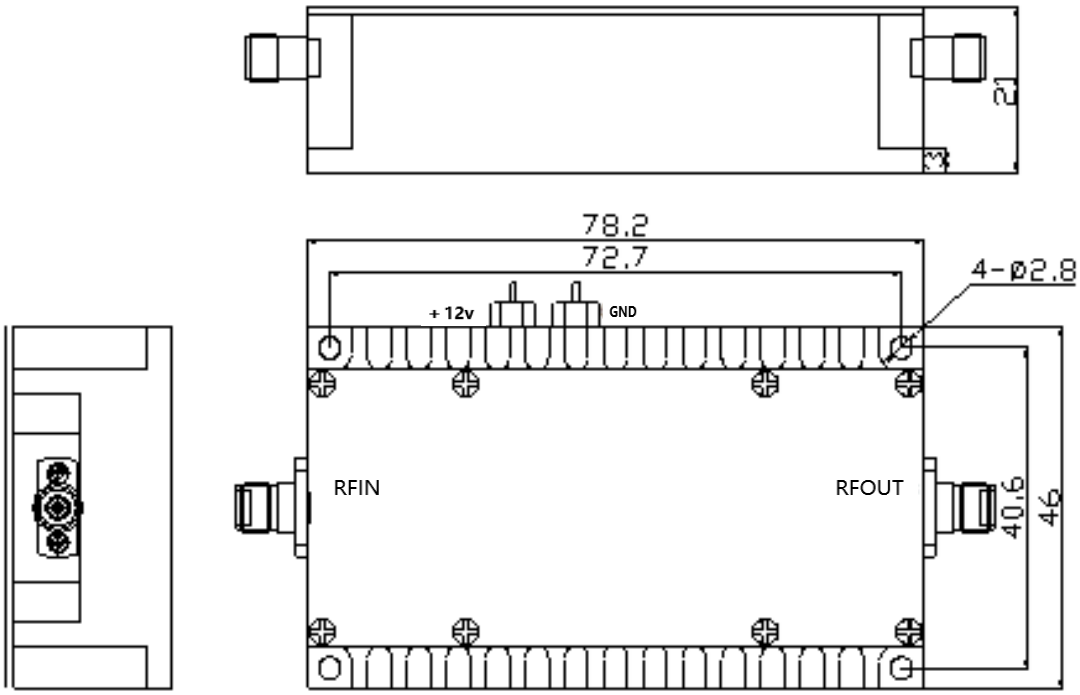

Specifications			
Frequency	0.5-18 GHz	Input /Output Connector	SMA-Female
Gain	⩾30dB	Stray Suppression	⩾60 dBc
Gain Flatness	±2.5 dB	Supply Current (Idd) (Vcc=+12V)	600 mA typ.
Output 1dB Compression Point (P1dB)	⩾25 dBm	Power Connector	Core Capacitor
Impedance	50 ohms	Material	Aluminum
Weight	0.05 kg	Size	78.2×46×21 mm
Operational Temperature	-30 ℃ ~ +55 ℃	Storage Temperature	-40 ℃~ +70 ℃

- Gain: ⩾35dB Typical
- Output Power: +35dBm Typical
- Supply Voltage: +28V @ 2A Max.

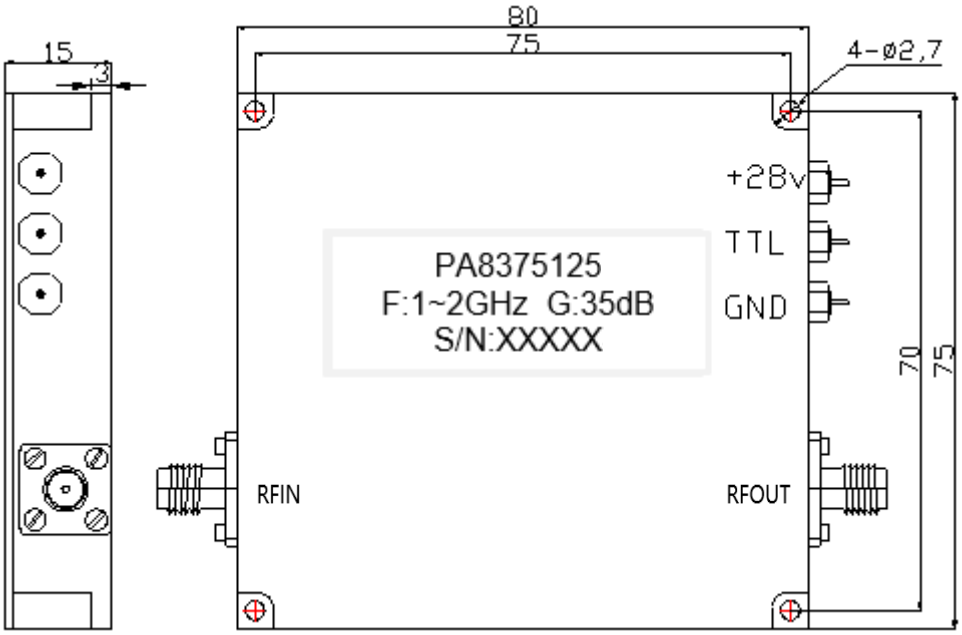

Specifications			
Frequency	1-2 GHz	Input /Output Connector	SMA-Female
Gain	⩾35 dB	Stray Suppression	⩾60 dBc
Gain Flatness	±1 dB	Supply Current (Idd) (Vcc=+28V)	⩽2 A
Output Power	⩾35 dBm	Power Connector	Core Capacitor
Impedance	50 ohms	Material	Aluminum
VSWR	⩽2.5	Size	80×76×15 mm
Operational Temperature	-30 ℃ ~ +55 ℃	Radiating Plate Size	85×76×22 mm
Storage Temperature	-40 ℃~ +70 ℃	Weight	0.05 kg

- Gain: ⩾35dB Typical
- Output Power: +35dBm Typical
- Supply Voltage: +28V @ 2A Max.

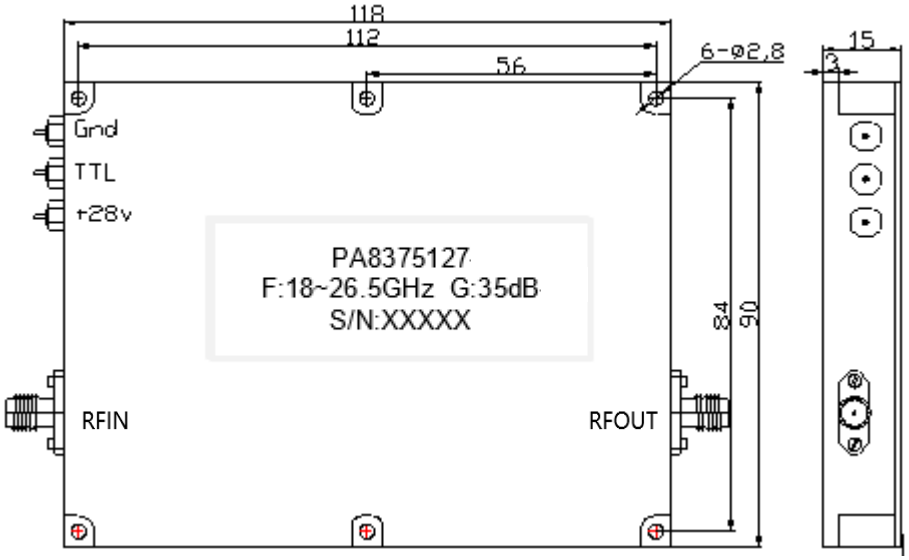

Specifications			
Frequency	18-26.5 GHz	Input /Output Connector	2.92-Female
Gain	⩾35 dB	Stray Suppression	⩾60 dBc
Gain Flatness	±3 dB	Supply Current (Idd) (Vcc=+28V)	⩽2 A
Output Power	⩾35 dBm	Power Connector	Core Capacitor
Impedance	50 ohms	Material	Aluminum
VSWR	⩽2.5	Size	118×90×15 mm
Operational Temperature	-30 ℃ ~ +55 ℃	Radiating Plate Size	120×100×33 mm
Storage Temperature	-40 ℃~ +70 ℃	Weight	0.05 kg

- Gain: ⩾33dB Typical
- Output Power: +33dBm Typical
- Supply Voltage: +28V @ 2A Max.

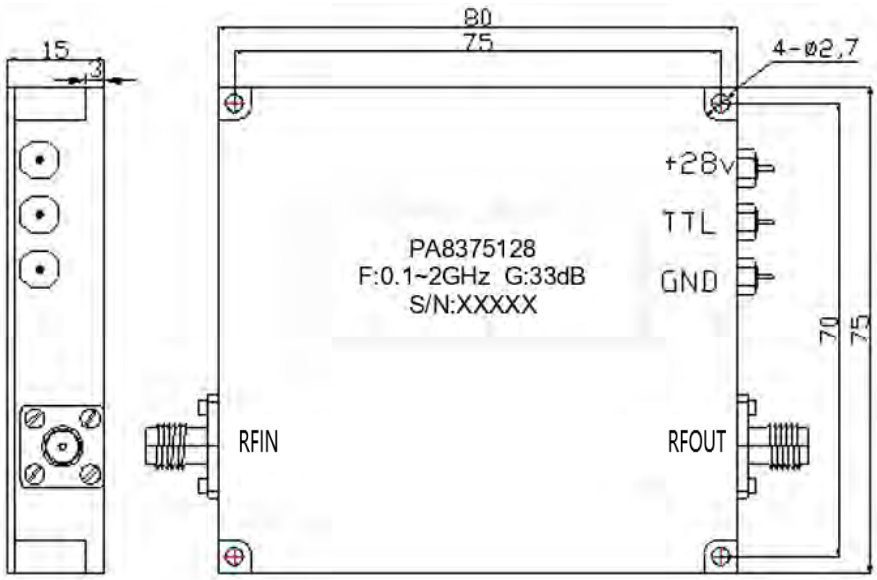

Specifications			
Frequency	0.1-2 GHz	Input /Output Connector	SMA-Female
Gain	⩾33 dB	Stray Suppression	⩾60 dBc
Gain Flatness	±2 dB	Supply Current (Idd) (Vcc=+28V)	⩽2 A
Output Power	⩾33 dBm	Power Connector	Core Capacitor
Impedance	50 ohms	Material	Aluminum
VSWR	⩽2.5	Size	80×76×15 mm
Operational Temperature	-30 ℃ ~ +55 ℃	Radiating Plate Size	85×76×22 mm
Storage Temperature	-40 ℃~ +70 ℃	Weight	0.05 kg

- Gain: ⩾33dB Typical
- Output Power: +33dBm Typical
- Supply Voltage: +28V @ 2A Max.

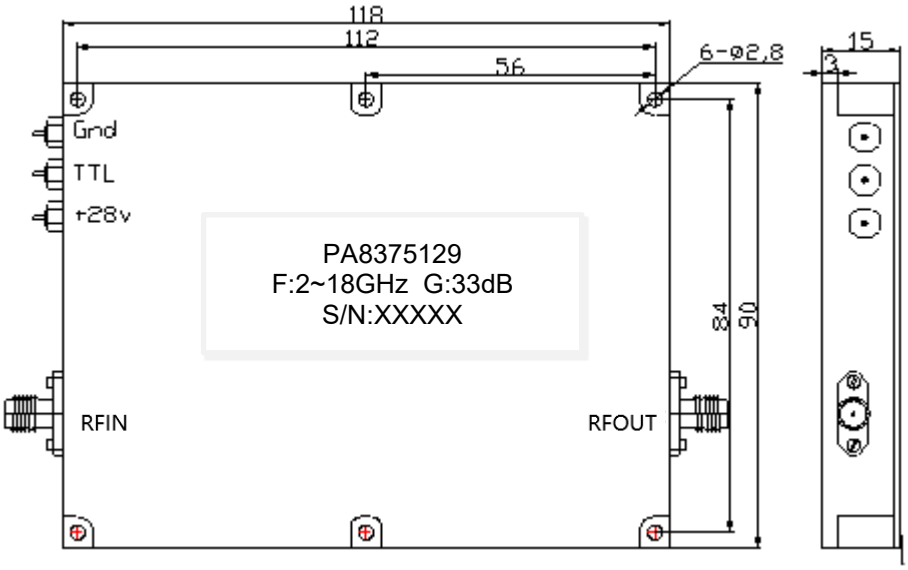

Specifications			
Frequency	2-18 GHz	Input /Output Connector	SMA-Female
Gain	⩾33 dB	Stray Suppression	⩾60 dBc
Gain Flatness	±2.5 dB	Supply Current (Idd) (Vcc=+28V)	⩽2 A
Output Power	⩾33 dBm	Power Connector	Core Capacitor
Impedance	50 ohms	Material	Aluminum
VSWR	⩽2.5	Size	118×90×15 mm
Operational Temperature	-30 ℃ ~ +55 ℃	Radiating Plate Size	120×100×33 mm
Storage Temperature	-40 ℃~ +70 ℃	Weight	0.05 kg

- Gain: 35dB Typical
- Output Power: +27dBm
- Supply Voltage: +12V @ 1.2A Max.

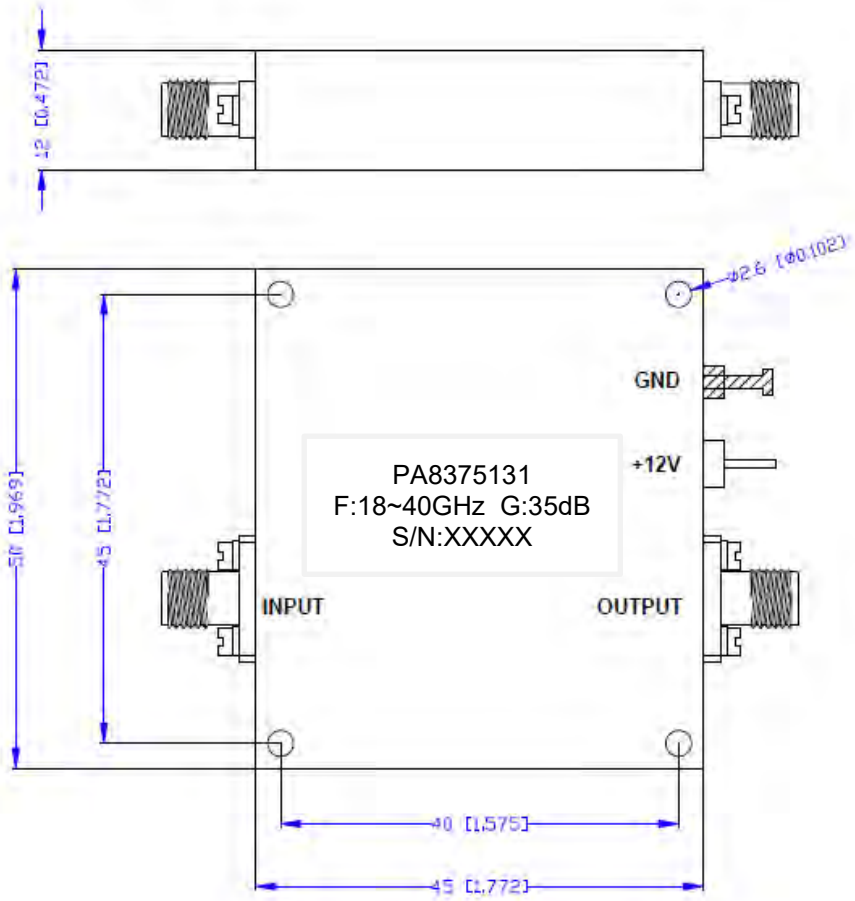

Specifications			
Frequency	18-40 GHz	Input /Output Power	0 dBm
Gain	30 dB Min. 35 dB Typ.	Supply Current (Idd) (Vcc=+12V) @Pout=0.5W	0.9 A Typ. 1.2 A Max.
Gain Flatness	±2.5 dB Typ.	Input /Output Connector	2.92-Female
Input VSWR	2.0 Typ.	Material	Aluminum
Output VSWR	2.0 Typ.	Finish	Gold Painting
P1dB	27 dBm Typ.	Size	50×45×12 mm
Psat	28 dBm Typ.	Weight	0.05 kg
Noise Figure	6 dB	Operational Temperature	-45 ℃ ~ +85 ℃
Impedance	50 ohms	Storage Temperature	-55 ℃~ +125 ℃

- Gain: 37dB Typical
- Output Power: +31dBm
- Supply Voltage: +12V @ 0.9A Max.

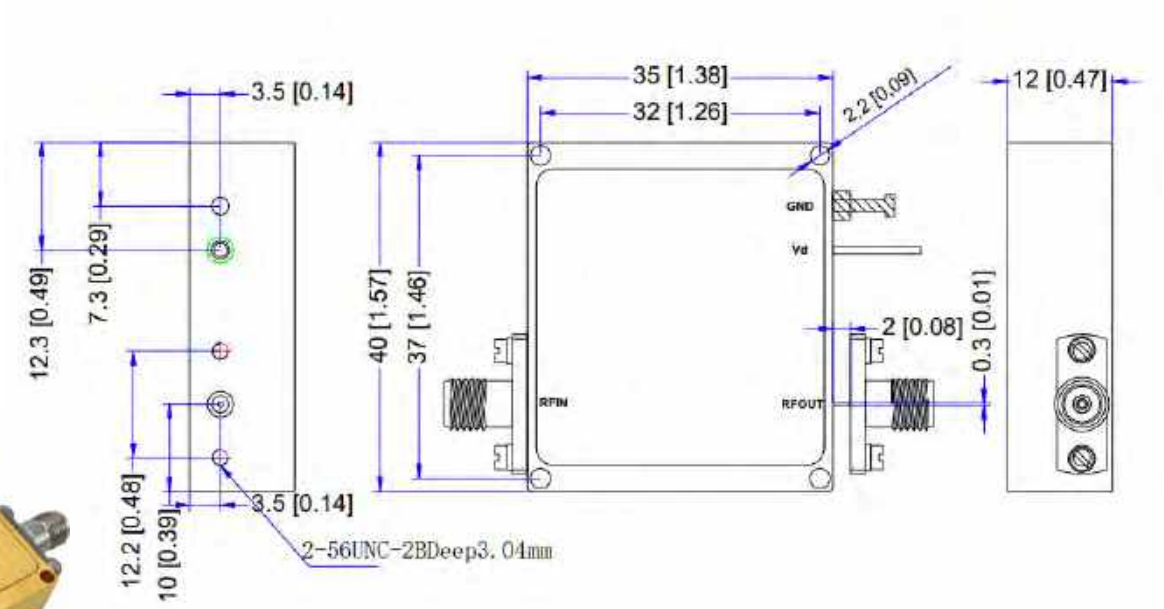

Specifications			
Frequency	0.3-18 GHz	Input /Output Power	5 dBm
Gain	37 dB Typ.	Supply Current (Idd) (Vcc=+12V) @P1dB	0.8 A Typ. 0.9 A Max.
Gain Flatness	±2.5 dB Typ.	Input /Output Connector	SMA-Female
Input VSWR	2.0 Typ.	Material	Aluminum
Output VSWR	2.0 Typ.	Finish	Gold Painting
P1dB	30 dBm Typ.	Size	35×40×12 mm
Psat	31 dBm Typ.	Weight	0.05 kg
Noise Figure	5 dB	Operational Temperature	-45 ℃ ~ +85 ℃
Impedance	50 ohms	Storage Temperature	-55 ℃~ +125 ℃

- Gain: 20dB Typical
- Output Power: +21dBm

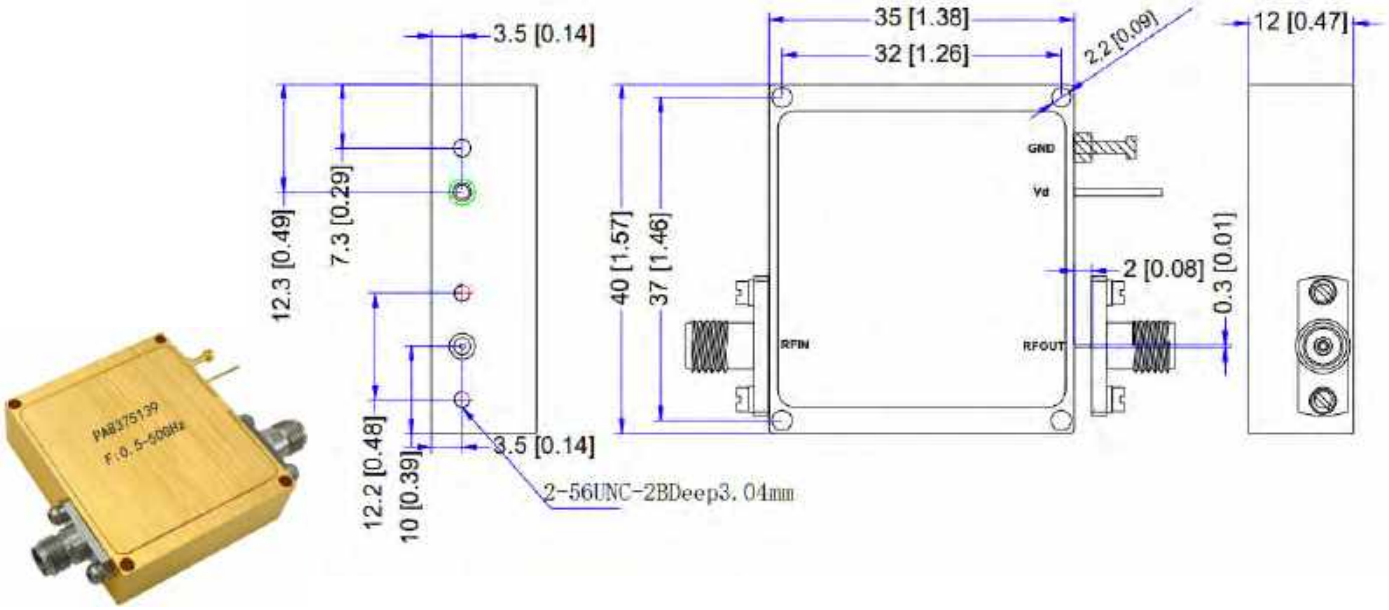

Specifications			
Frequency	0.5-50 GHz	P1dB	21 dBm Typ.
Gain	18 dB Min. 20 dB Typ.	Psat	22 dBm Typ.
Gain Flatness	±3.0 dB Typ. ±4.0 dB Max.	Input Max Power (no damage)	0 dBm Max.
Input VSWR	1.8 Typ. 2.5 Max.	Supply Current (Vcc=+12V)	400 mA Typ.
Output VSWR	1.8 Typ. 2.5 Max.	Impedance	50 ohms
Spurious	-60 dBc	Input /Output Connector	2.4mm-Female
Material	Aluminum	Operational Temperature	-45 ℃ ~ +85 ℃
Weight	0.05 kg	Storage Temperature	-55 ℃~ +125 ℃

- Gain: 37dB Typical
- Output Power: +31dBm
- Supply Voltage: +12V @ 0.9A Max.

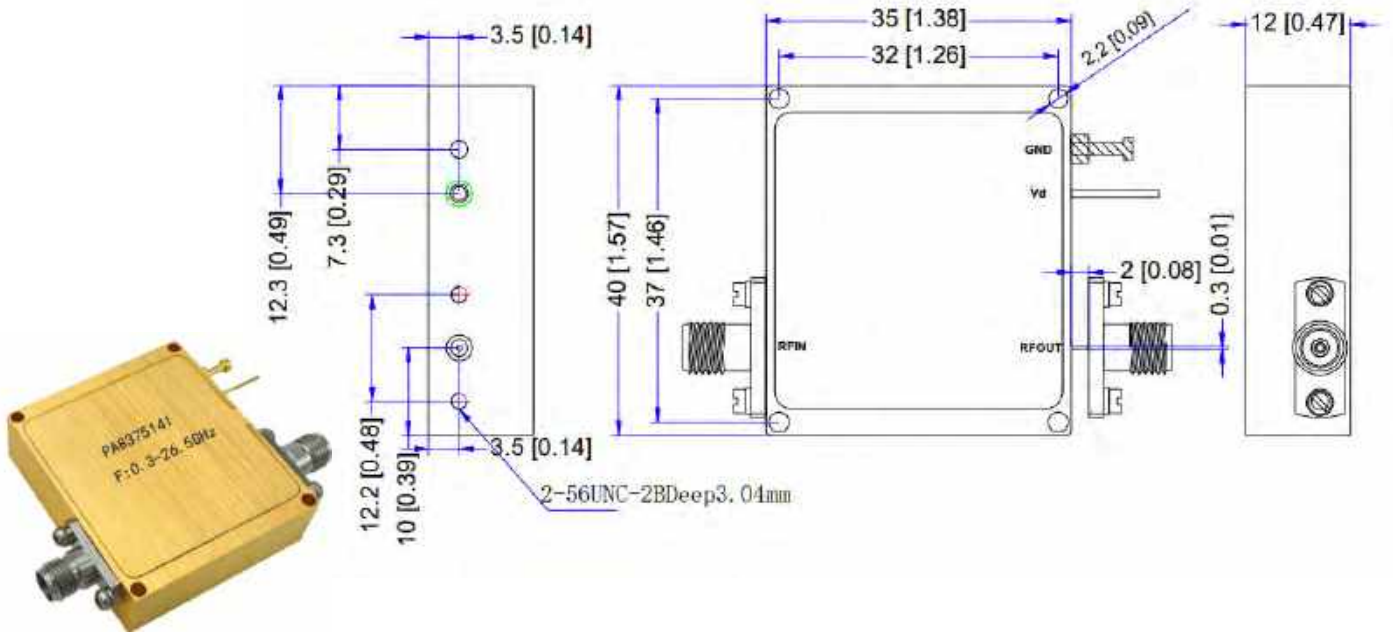

Specifications			
Frequency	0.3-26.5 GHz	Input /Output Power	5 dBm
Gain	37 dB Typ.	Supply Current (Idd) (Vcc=+12V) @P1dB	0.8 A Typ. 0.9 A Max.
Gain Flatness	±2.5 dB Typ.	Input /Output Connector	SMA-Female
Input VSWR	2.0 Typ.	Material	Aluminum
Output VSWR	2.0 Typ.	Finish	Gold Painting
P1dB	30 dBm Typ.	Size	35×40×12 mm
Psat	31 dBm Typ.	Weight	0.05 kg
Noise Figure	5 dB	Operational Temperature	-45 ℃ ~ +85 ℃
Impedance	50 ohms	Storage Temperature	-55 ℃~ +125 ℃

- Gain: 37dB Typical
- Output Power: +31dBm
- Supply Voltage: +12V @ 0.9A Max.

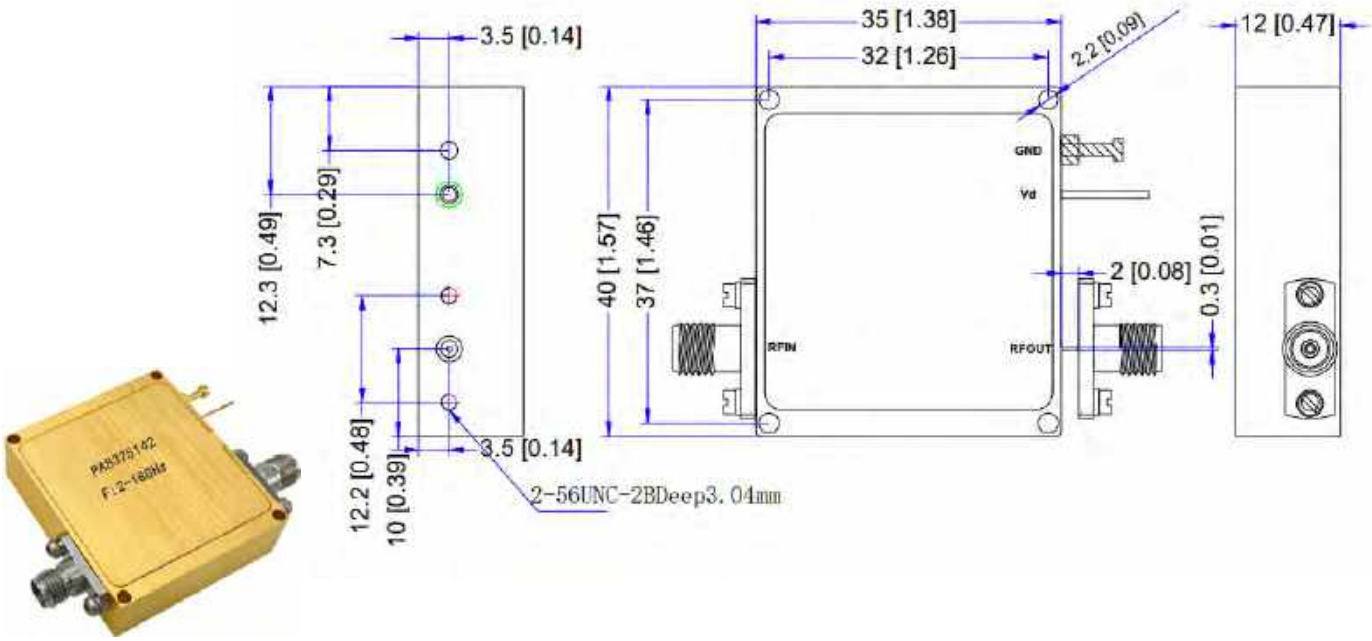

Specifications			
Frequency	2-18 GHz	Input /Output Power	5 dBm
Gain	37 dB Typ.	Supply Current (Idd) (Vcc=+12V) @P1dB	0.8 A Typ. 0.9 A Max.
Gain Flatness	±2.5 dB Typ.	Input /Output Connector	SMA-Female
Input VSWR	2.0 Typ.	Material	Aluminum
Output VSWR	2.0 Typ.	Finish	Gold Painting
P1dB	30 dBm Typ.	Size	35×40×12 mm
Psat	31 dBm Typ.	Weight	0.05 kg
Noise Figure	5 dB	Operational Temperature	-45 ℃ ~ +85 ℃
Impedance	50 ohms	Storage Temperature	-55 ℃~ +125 ℃

- Gain: 30dB Min.
- Output Power: +30dBm
- Supply Voltage: +12V @ 1.7A Max.

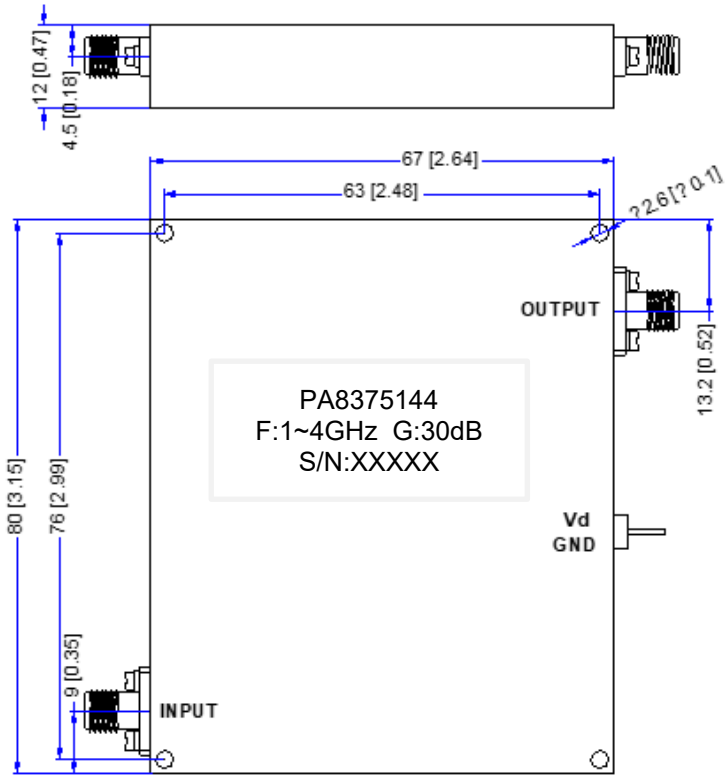

Specifications			
Frequency	1-4 GHz	Input Power (no damage)	5 dBm Max.
Gain	30 dB Min.	Supply Current (Idd) (Vcc=+12V) @Pout=2W	1.5 A Typ. 1.7 A Max.
Gain Flatness	±1.0 dB Typ. ±1.5 dB Max.	Second Harmonic	-15 dBc Typ.
Input VSWR	1.6 Typ. 2.0 Max.	Spurious	-60 dBc Typ.
Output VSWR	1.8 Typ. 2.0 Typ.	Input /Output Connector	SMA-Female
P1dB	30 dBm Min.	Material	Aluminum
Psat	33 dBm Typ.	Finish	Gold Painting
Noise Figure	5 dB Typ.	Package Sealing	Standard Sealing
Impedance	50 ohms	Weight	0.05 kg
Operational Temperature	-45 ℃ ~ +85 ℃	Storage Temperature	-55 ℃~ +125 ℃

- Gain: 30dB Typical
- Output Power: +25dBm
- Supply Voltage: +12V @ 0.6A Max.

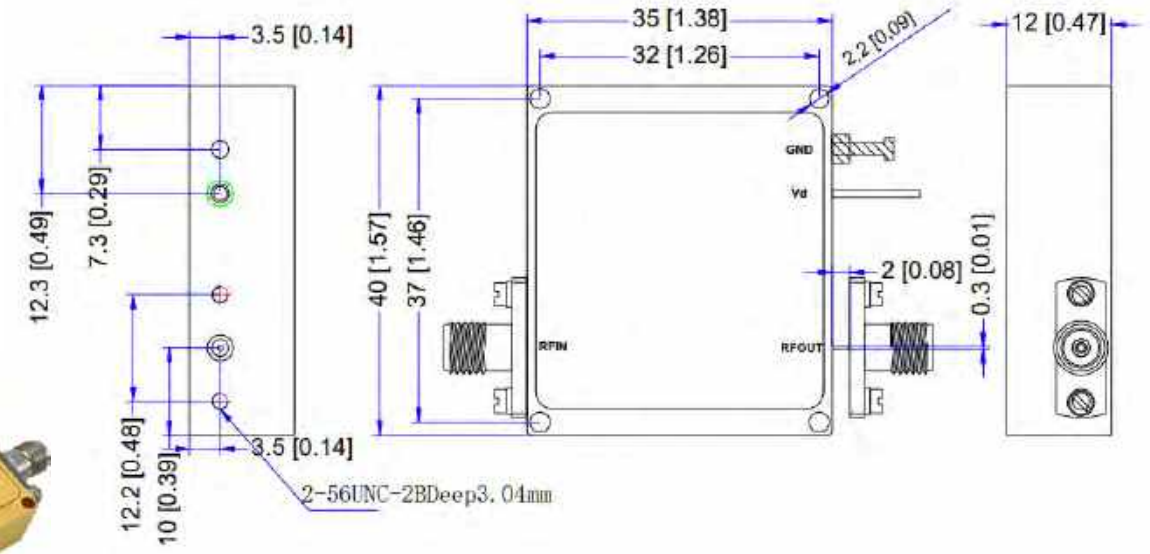

Specifications			
Frequency	0.2-4 GHz	Input Power (no damage)	5 dBm Max.
Gain	30 dB Typ.	Supply Current (Idd) (Vcc=+12V) @P1dB	600 mA Max.
Gain Flatness	±2.0 dB Typ.	Input /Output Connector	SMA-Female
Input VSWR	2.0 Typ.	Second Harmonic	-15 dBc Typ. -13 dBc Max.
Output VSWR	2.0 Typ.	Spurious	-60 dBc Typ.
P1dB	25 dBm Typ.	Material	Aluminum
Psat	27 dBm Typ.	Finish	Gold Painting
Noise Figure	5 dB	Package Sealing	Standard Sealing
Impedance	50 ohms	Weight	0.05 kg
Operational Temperature	-45 ℃ ~ +85 ℃	Storage Temperature	-55 ℃~ +125 ℃

- 2.92 Connector
- Absorptive

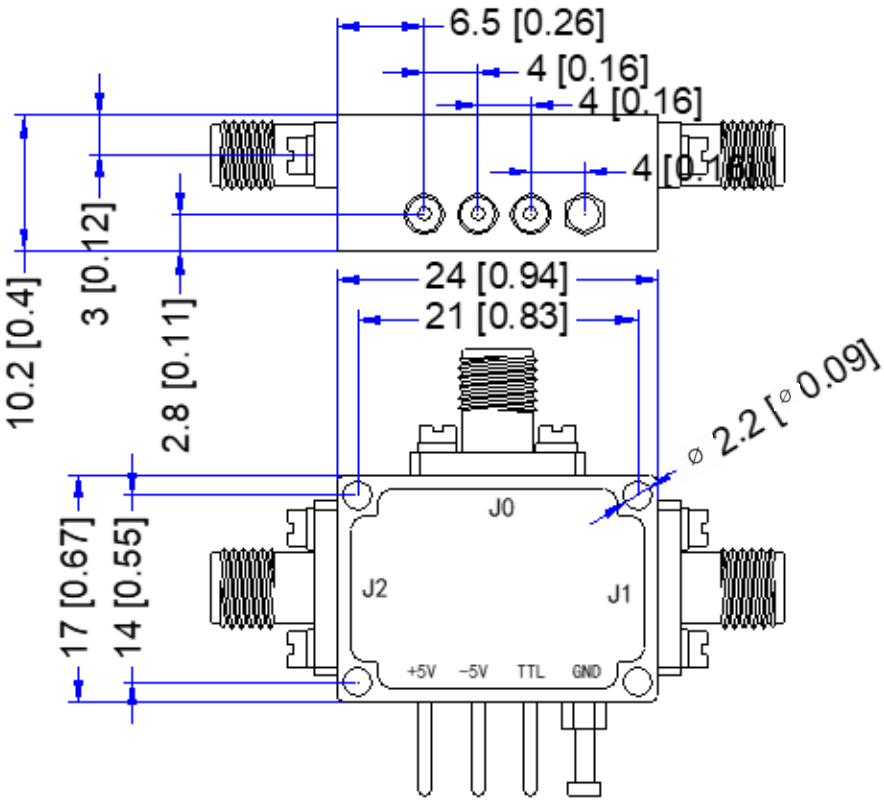

Electrical Specifications	
Operating Frequencies	0.5 to 40 GHz
VSWR	2.5 Max.
Isolation	48 dB Min. 55 dB Typ.
Insertion Loss	4.5 dB（Type） 5.5 dB（Max）
RF Input Power	23 dBm
Bias Current (+5V /-5V)	50 mA Max.
Switching Speed	100 ns Max.
TTL Control Voltage	+5V/0V
Connectors	2.92 (F)
Finishing	Gold Plating
Material	Aluminum
Operating Temperature	-45 to +85℃
Storage Temperature	-55 to +125℃

Truth Table:

Control Input TTL	Signal Path State
TTL	
1	J0-J1
0	J0-J2

- 2.92 Connector
- Absorptive

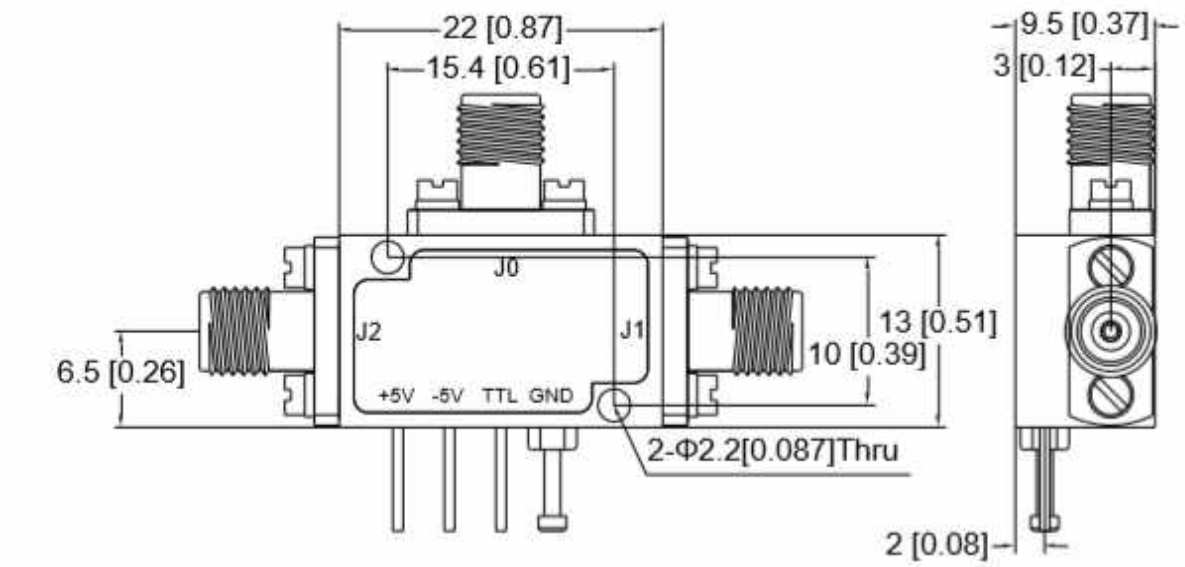

Electrical Specifications	
Operating Frequencies	18 to 40 GHz
VSWR	2.5 （Max）
Isolation	45 dB（Min） 50 dB（Type）
Insertion Loss	4.5 dB（Type） 5.5 dB（Max）
RF Input Power	23 dBm
Bias Current (+5V /-5V)	50 mA （Max）
Switching Speed	50 ns
TTL Control Voltage	+5V/0V
Connectors	2.92 (F)
Finishing	Gold Plating
Material	Aluminum
Operating Temperature	-45 to +85℃
Storage Temperature	-55 to +125℃

Truth Table:

Control Input TTL	Signal Path State
TTL	
1	J0-J1
0	J0-J2

- SMA Connector
- Absorptive

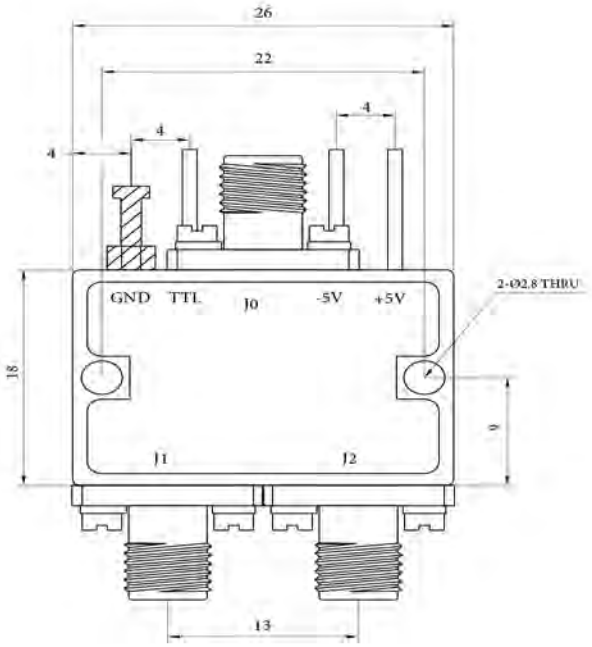

Electrical Specifications	
Operating Frequencies	0.8 to 20 GHz
VSWR	1.8 (Type) ; 2.0 (Max.) @ 0.8 to 8 GHz 1.6 (Type) ; 2.0 (Max.) @ 8 to 12 GHz 1.6 (Type) ; 2.0 (Max.) @ 12 to 20 GHz
Isolation	70 dB Min, 85 dB Max @ 0.8 to 8 GHz 70 dB Min, 75 dB Max @ 8 to 12 GHz 60 dB Min, 65 dB Max @ 12 to 20 GHz
Insertion Loss	1.5 (Type) ; 1.7 (Max.) @ 0.8 to 8 GHz 1.8 (Type) ; 2.2 (Max.) @ 8 to 12 GHz 2.8 (Type) ; 3.2 (Max.) @ 12 to 20 GHz
Insertion Loss Temperature Coefficient	0.003 dB/℃
RF Input Power	30 dBm
DC Power Dissipation	0.5 W
0.1 dB Compression Point	30 dBm
IIP3	55 dBm
Bias Current (+5V /-5V)	80 / 50 mA
TTL Control Voltage	0~0.8V/2.8~5V
Switching Time	100 ns
Connectors	SMA (F)
Characteristic Impedance	50 Ω
Finishing	Gold Plating
Material	Aluminum
Weight	0.16 kg
Operating Temperature	-45 to +85℃
Storage Temperature	-55 to +125℃

- SMA Connector
- Absorptive

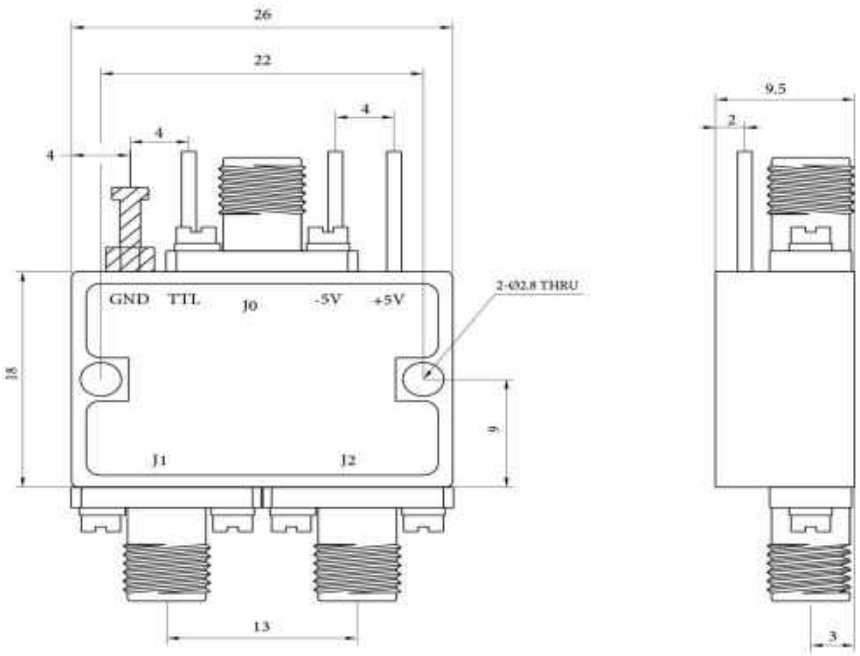

Electrical Specifications	
Operating Frequencies	1 to 26.5 GHz
VSWR	1.8 (Type) ; 2.0 (Max.) @ 1 to 8 GHz 1.6 (Type) ; 2.0 (Max.) @ 8 to 12 GHz 1.6 (Type) ; 2.0 (Max.) @ 12 to 26.5 GHz
Isolation	70 dB Min, 85 dB Max @ 1 to 8 GHz 70 dB Min, 75 dB Max @ 8 to 12 GHz 60 dB Min, 65 dB Max @ 12 to 26.5 GHz
Insertion Loss	1.5 (Type) ; 1.7 (Max.) @ 1 to 8 GHz 1.8 (Type) ; 2.2 (Max.) @ 8 to 12 GHz 2.8 (Type) ; 3.2 (Max.) @ 12 to 26.5 GHz
Insertion Loss Temperature Coefficient	0.003 dB/℃
RF Input Power	30 dBm
DC Power Dissipation	0.5 W
0.1 dB Compression Point	30 dBm
IIP3	55 dBm
Bias Current (+5V /-5V)	80 / 50 mA
TTL Control Voltage	0~0.8V/2.8~5V
Switching Time	100 ns
Connectors	SMA (F)
Characteristic Impedance	50 Ω
Finishing	Gold Plating
Material	Aluminum
Weight	0.16 kg
Operating Temperature	-45 to +85℃
Storage Temperature	-55 to +125℃

- SMA Connector
- Absorptive

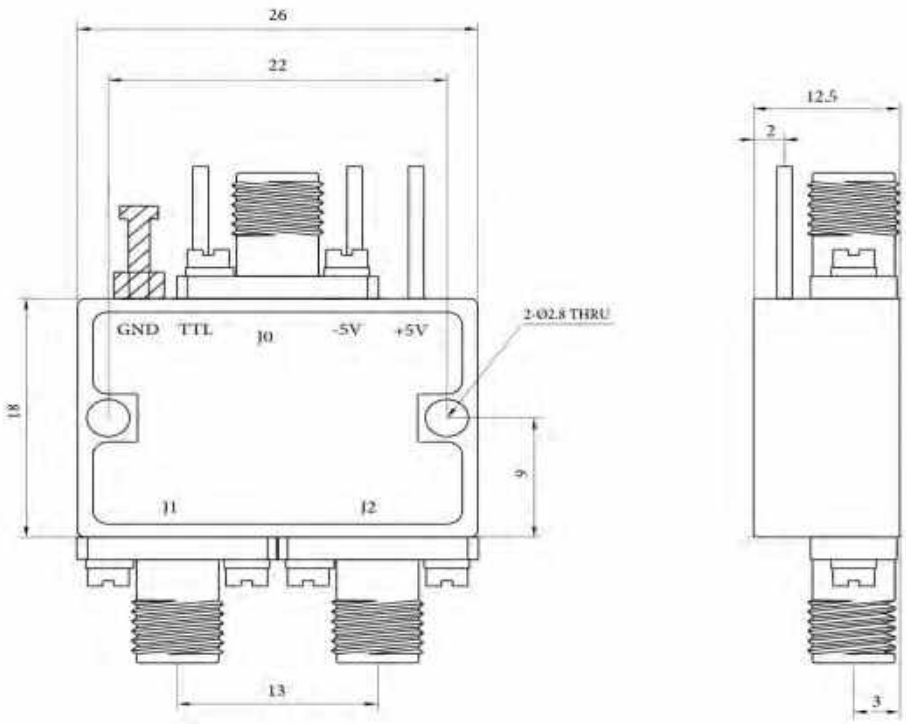

Electrical Specifications	
Operating Frequencies	0.5 to 12 GHz
VSWR	1.5 (Type) ; 1.8 (Max.) @ 0.5 to 6 GHz 1.5 (Type) ; 1.8 (Max.) @ 6 to 12 GHz
Isolation	80 dB Min, 90 dB Max @ 0.5 to 6 GHz 80 dB Min, 85 dB Max @ 6 to 12 GHz
Insertion Loss	1.3 (Type) ; 1.5 (Max.) @ 0.5 to 6 GHz 2.0 (Type) ; 2.5 (Max.) @ 6 to 12 GHz
Insertion Loss Temperature Coefficient	0.003 dB/℃
RF Input Power	30 dBm
DC Power Dissipation	0.4 W
0.1 dB Compression Point	30 dBm
IIP3	55 dBm
Bias Current (+5V /-5V)	80 / 50 mA
TTL Control Voltage	0~0.8V/2.8~5V
Switching Time	250 ns
Connectors	SMA (F)
Characteristic Impedance	50 Ω
Finishing	Gold Plating
Material	Aluminum
Sealing	Hermetically Sealed (Laser Welded)
Weight	0.48 kg
Operating Temperature	-45 to +85℃
Storage Temperature	-55 to +125℃

- SMA Connector
- Electronic Switch
- Reflective

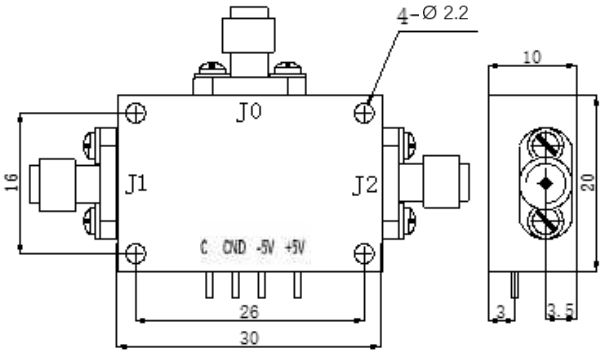

Electrical Specifications	
Operating Frequencies	0.5 to 2 GHz
VSWR	1.5
Isolation	50 dB
Insertion Loss	1.5 dB
RF Input Power	30 dBm
Peak Power	33 dBm
Duty Cycle	20%
DC Power Dissipation	1.5 W
Bias Current (+5V /-5V)	100 mA
Rise Time	10 ns
Fall Time	10 ns
Switching Time	30 ns
Connectors	SMA (F)
Characteristic Impedance	50 Ω
Finishing	Nickel Plating
Material	Aluminum
Weight	0.05 kg
Operating Temperature	-20 to +55℃
Storage Temperature	-40 to +65℃

Truth Table:

Control Input TTL	Signal Path State
C	
0	J1
1	J2

- 2.92 Connector
- Absorptive

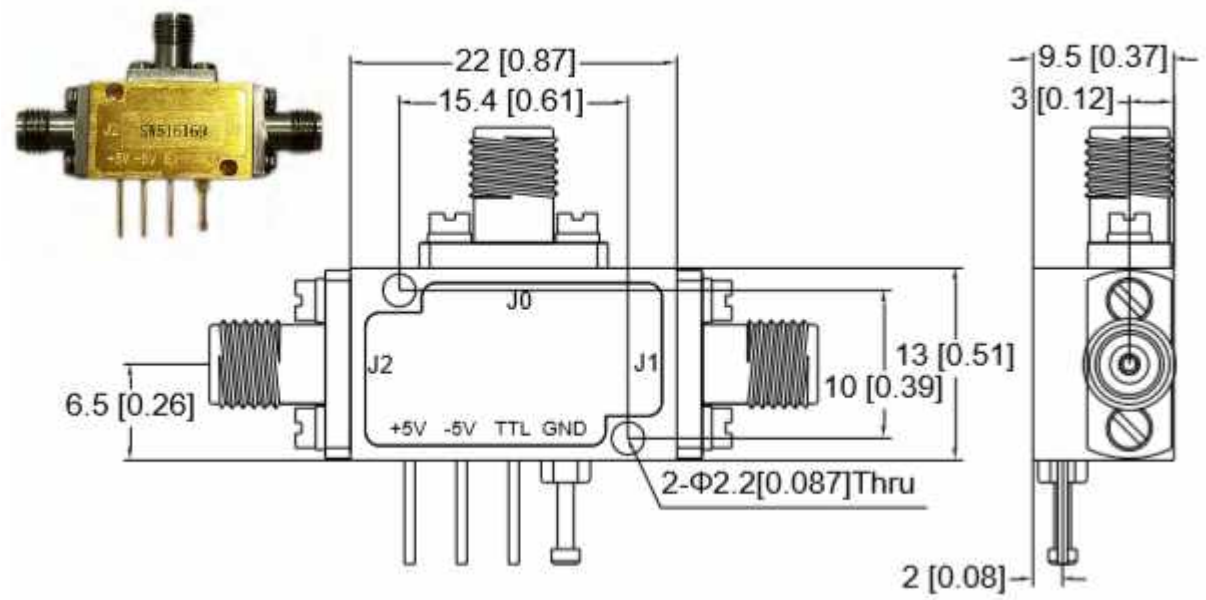

Electrical Specifications	
Operating Frequencies	1 to 40 GHz
VSWR	2.5 （Max）
Isolation	45 dB（Min） 50 dB（Type）
Insertion Loss	4.5 dB（Type） 5.5 dB（Max）
RF Input Power	23 dBm
Bias Current (+5V /-5V)	50 mA （max）
Switching Speed	50 ns
TTL Control Voltage	+5V/0V
Connectors	2.92 (F)
Finishing	Gold Plating
Material	Aluminum
Operating Temperature	-45 to +85℃
Storage Temperature	-55 to +125℃

Truth Table:

Control Input TTL	Signal Path State
TTL	
1	J0-J1
0	J0-J2

- SMA Connector
- Absorptive

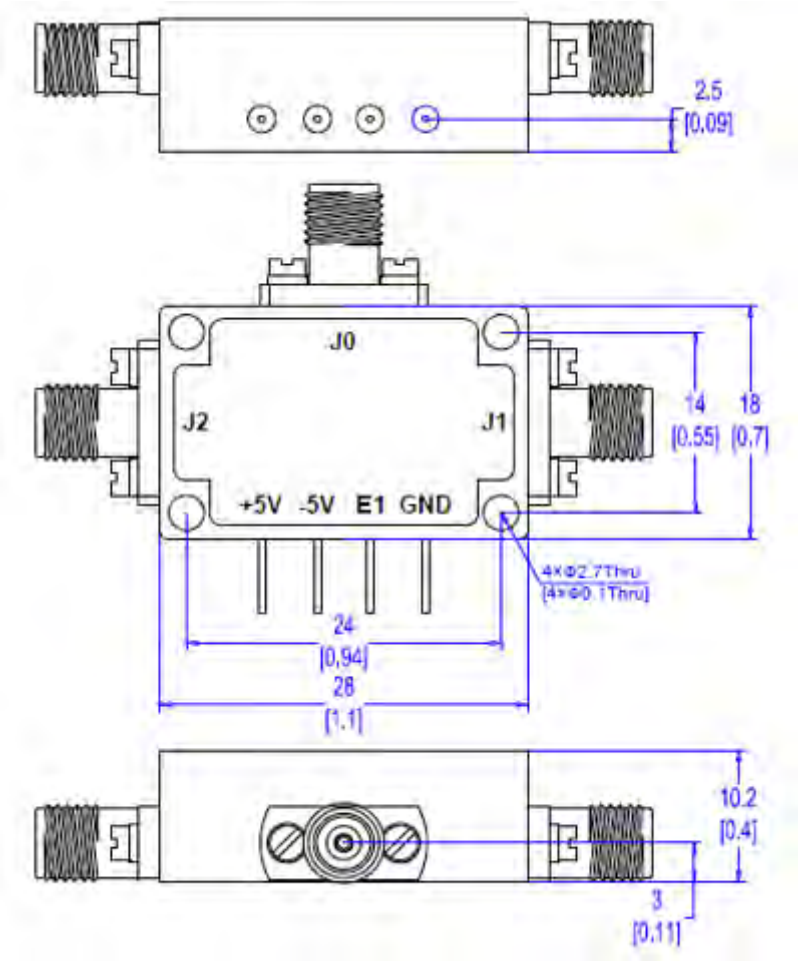

Electrical Specifications	
Operating Frequencies	0.5 to 6 GHz
VSWR	2.0 Max.
Isolation	60 dB Min.
Insertion Loss	1.7 dB Max.
RF Input Power	30 dBm
Bias Current (+5V /-5V)	100 mA / 50mA Max.
Switching Speed	100 ns
TTL Control Voltage	+5V/0V
Connectors	SMA (F)
Finishing	Gold Plating
Material	Aluminum
Operating Temperature	-45 to +85℃
Storage Temperature	-55 to +125℃

- SMA Connector
- Electronic Switch
- Absorptive

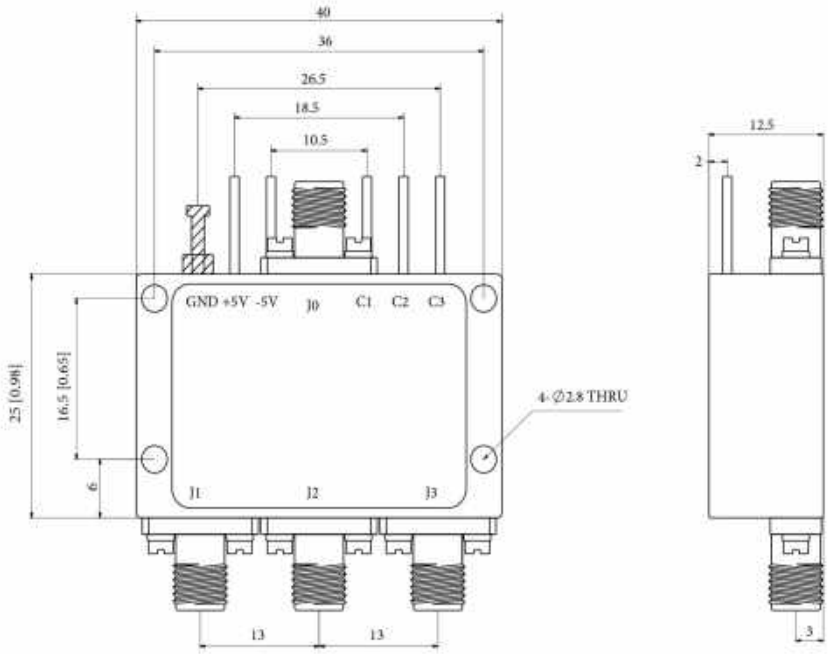

Electrical Specifications	
Operating Frequencies	0.02 to 1 GHz
VSWR	1.30 (Type) ; 1.50 (Max.)
Isolation	62 dB (Min); 80 dB (Typ)
Insertion Loss	1.2 dB (Type); 1.6 dB (Max.)
Insertion Loss Temperature Coefficient	0.003 dB/℃
RF Input Power	1 W
DC Power Dissipation	0.6 W
1 dB Compression Point	30 dB
IIP3	55 dBm
Bias Current (+5V /-5V)	120 / 50 mA
Switching Time	200 ns
Connectors	SMA(F)
Characteristic Impedance	50 Ω
Finishing	Gold Plating
Material	Aluminum
Biasing	+5V ±10% / -5V±10%
TTL Control Voltage	0~0.8 V / 2~5 V
Weight	0.03 kg
Operating Temperature	-45 to +85℃
Storage Temperature	-50 to +125℃

- SMA Connector
- Absorptive

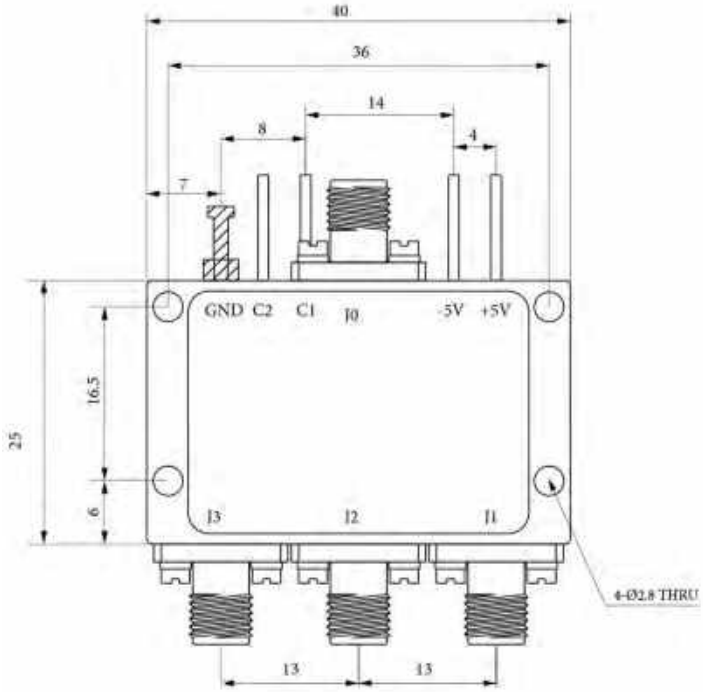

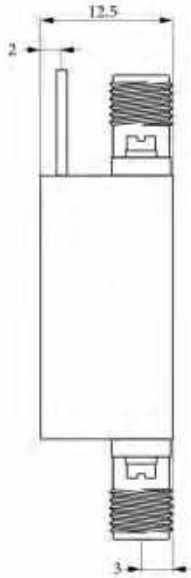

Electrical Specifications	
Operating Frequencies	0.02 to 18 GHz
VSWR	1.8 (Type) ; 2.0 (Max.) @ 0.02 to 8 GHz 1.6 (Type) ; 2.0 (Max.) @ 8 to 12 GHz 1.6 (Type) ; 2.0 (Max.) @ 12 to 18 GHz
Isolation	60 dB Min, 80 dB Max @ 0.02 to 6 GHz 60 dB Min, 75 dB Max @ 6 to 12 GHz 60 dB Min, 65 dB Max @ 12 to 18 GHz
Insertion Loss	1.8 (Type) ; 2.2 (Max.) @ 0.02 to 6 GHz 4.2 (Type) ; 4.5 (Max.) @ 6 to 12 GHz 4.4 (Type) ; 4.8 (Max.) @ 12 to 18 GHz
Insertion Loss Temperature Coefficient	0.003 dB/℃
RF Input Power	30 dBm
DC Power Dissipation	0.6 W
0.1 dB Compression Point	30 dBm
IIP3	55 dBm
Bias Current (+5V /-5V)	120 / 50 mA
TTL Control Voltage	0~0.8V/2.8~5V
Switching Time	250 ns
Connectors	SMA (F)
Characteristic Impedance	50 Ω
Finishing	Gold Plating
Material	Aluminum
Weight	0.48 kg
Operating Temperature	-45 to +85℃
Storage Temperature	-55 to +125℃

- SMA Connector
- Electronic Switch
- Absorptive

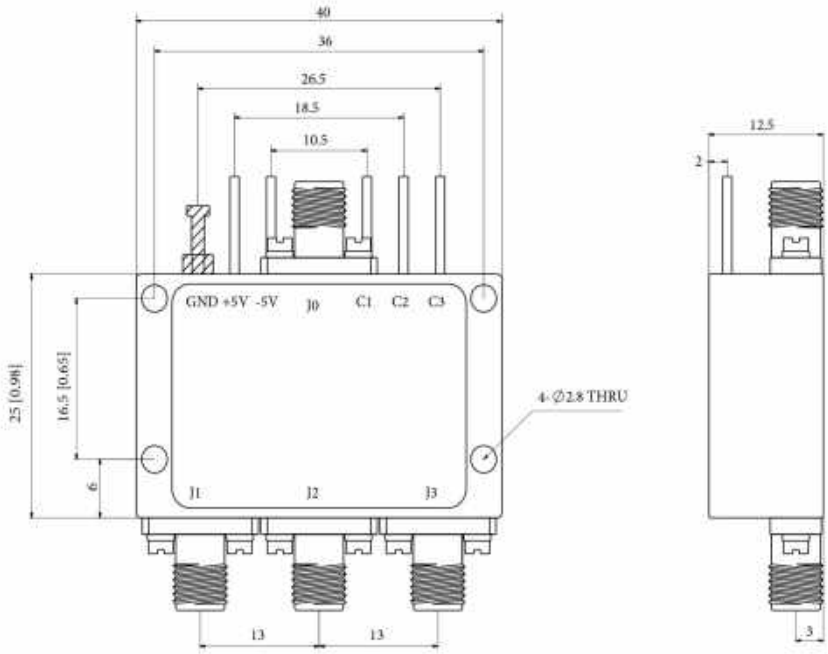

Electrical Specifications	
Operating Frequencies	0.6 to 6 GHz
VSWR	1.30 (Type) ; 1.50 (Max.)
Isolation	65 dB (Min); 70 dB (Typ)
Insertion Loss	1.6 dB (Type); 2.0 dB (Max.)
Insertion Loss Temperature Coefficient	0.003 dB/℃
RF Input Power	1 W
DC Power Dissipation	0.6 W
1 dB Compression Point	30 dB
IIP3	55 dBm
Bias Current (+5V /-5V)	120 / 50 mA
Switching Time	200 ns
Connectors	SMA(F)
Characteristic Impedance	50 Ω
Finishing	Gold Plating
Material	Aluminum
Biasing	+5V ±10% / -5V±10%
TTL Control Voltage	0~0.8 V / 2~5 V
Weight	0.03 kg
Operating Temperature	-45 to +85℃
Storage Temperature	-50 to +125℃

- SMA Connector
- Absorptive

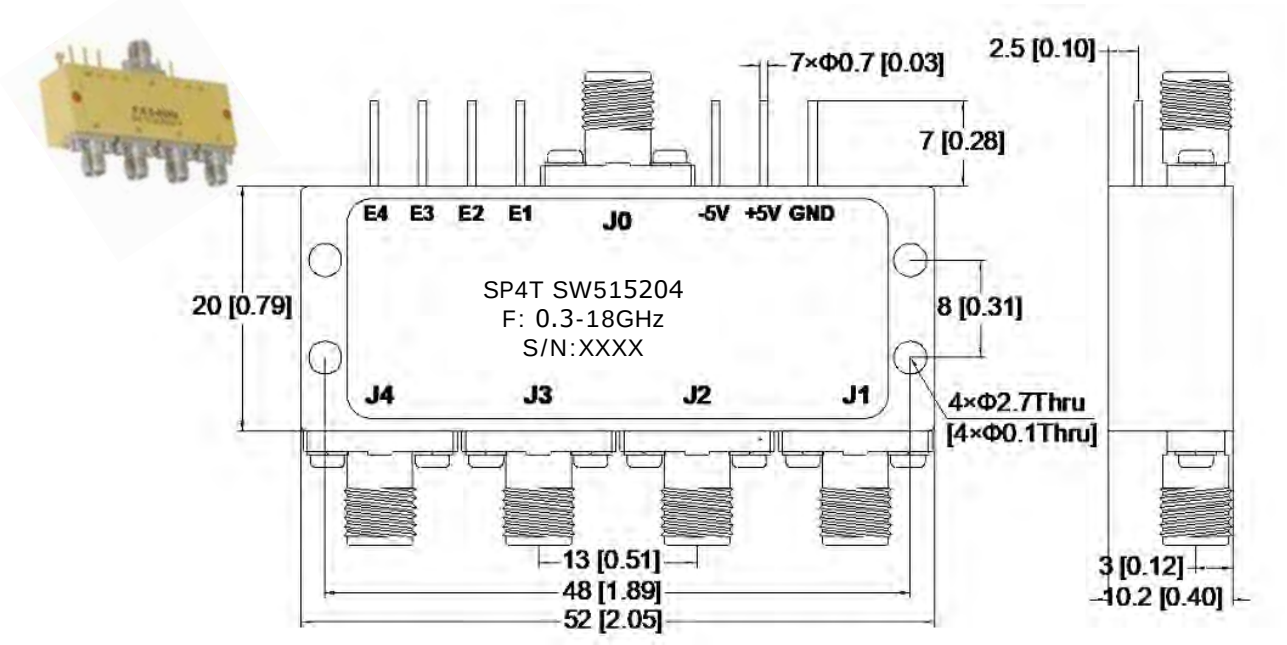

Electrical Specifications	
Operating Frequencies	0.3 to 18 GHz
VSWR	2.0 Max.
Isolation	60 dB Min.
Insertion Loss	3.5 dB Typ. 3.7 dB Max.
RF Input Power	30 dBm
Bias Current (+5V /-5V)	200mA / 50 mA
Switching Speed	100 ns Max.
TTL Control Voltage	+5V/0V
Connectors	SMA (F)
Finishing	Gold Plating
Material	Aluminum
Operating Temperature	-45 to +85℃
Storage Temperature	-55 to +125℃

- SMA Connector
- Absorptive
- Integrated power-up

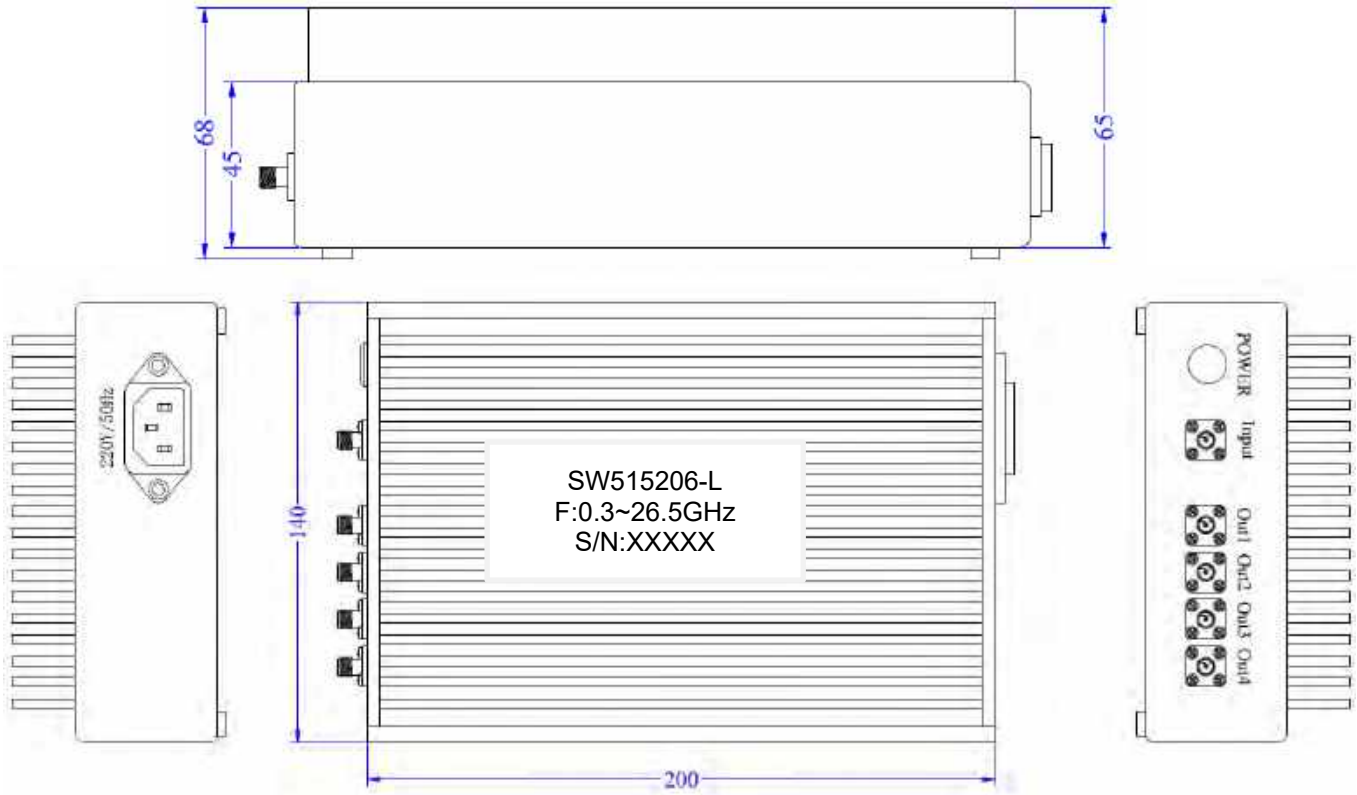

Electrical Specifications	
Operating Frequencies	0.3 to 26.5 GHz
VSWR	2.50 (Type); 3.00 (Max.)
Isolation	50 dB (Min.); 55 dB (Typ.)
Insertion Loss	6.0 dB (Typ.); 7.0 dB (Max.)
RF Input Power	23 dBm
DC Power Dissipation	1.2 W
Bias Current (+5V /-5V)	180 / 50 mA
RF Connectors	SMA (F)
Network Port Control	TTL
Characteristic Impedance	50 Ω
Finishing	Black
Material	Aluminum
Weight	1 kg
Operating Temperature	-45 to +85℃
Storage Temperature	-50 to +125℃

Truth Table:

Control Input TTL				Signal Path State
E4	E3	E2	E1	
1	1	1	0	J0-J1
1	1	0	1	J0-J2
1	0	1	1	J0-J3
0	1	1	1	J0-J4

- SMA Connector
- Absorptive

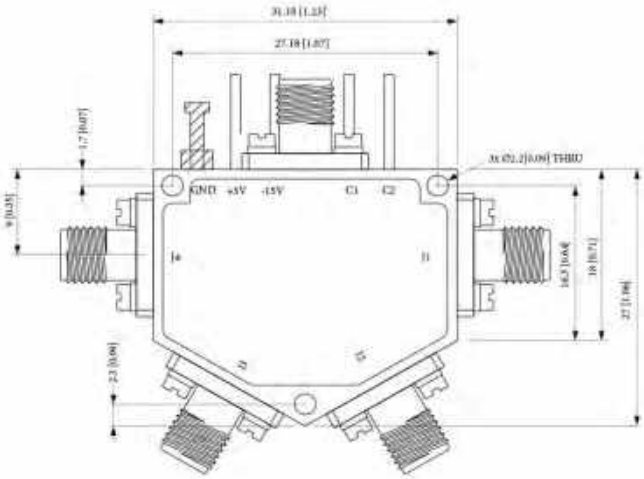

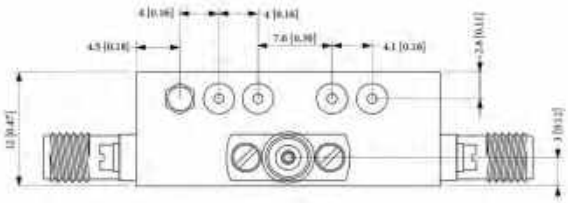

Electrical Specifications	
Operating Frequencies	1 to 18 GHz
VSWR	2.0 Max.
Isolation	60 dB Min.
Insertion Loss	3.5 dB Max.
Phase	±30°
RF Input Power	30 dBm
DC Power Dissipation	1.2 W
Bias Current (+5V /-5V)	200 / 50 mA
Switching Time	100 ns
Connectors	SMA (F)
Control Port	J30J (M)
Characteristic Impedance	50Ω
Finishing	Gold Plating
Material	Aluminum
Weight	0.03 kg
Operating Temperature	-45 to +85℃
Storage Temperature	-55 to +125℃

Truth Table:

Control Input TTL				Signal Path State
E4	E3	E2	E1	
1	1	1	0	J0-J1
1	1	0	1	J0-J2
1	0	1	1	J0-J3
0	1	1	1	J0-J4
1	1	1	1	ALL OFF

- SMA Connector
- Electronic Switch
- Absorptive

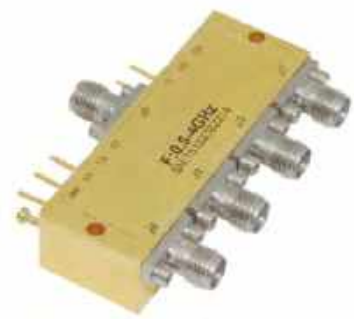

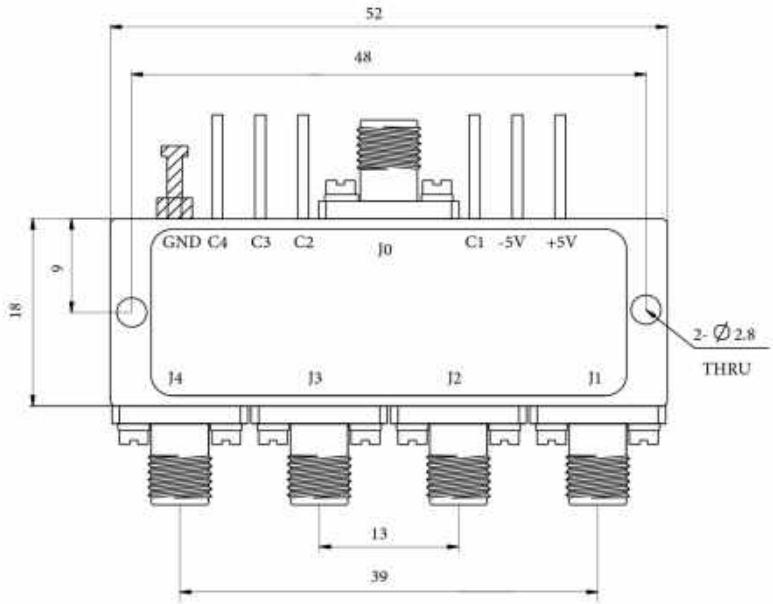

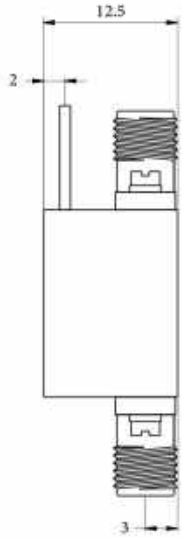

Electrical Specifications	
Operating Frequencies	0.5 to 4 GHz
VSWR	1.30 (Type) ; 1.50 (Max.)
Isolation	80 dB
Insertion Loss	1.2 dB (Type); 1.5 dB (Max.)
Insertion Loss Temperature Coefficient	0.003 dB/℃
RF Input Power	1 W
DC Power Dissipation	0.3 W
1 dB Compression Point	30 dB
IM3	40 dBc
IIP3	50 dBm
Bias Current (+5V /-5V)	80 / 50 mA
Switching Time	100 ns
Connectors	SMA(F)
Characteristic Impedance	50 Ω
Finishing	Gold Plating
Material	Aluminum
Weight	0.04 kg
Operating Temperature	-45 to +85℃
Storage Temperature	-55 to +125℃

- 2.4mm Connector
- Electronic Switch
- Absorptive

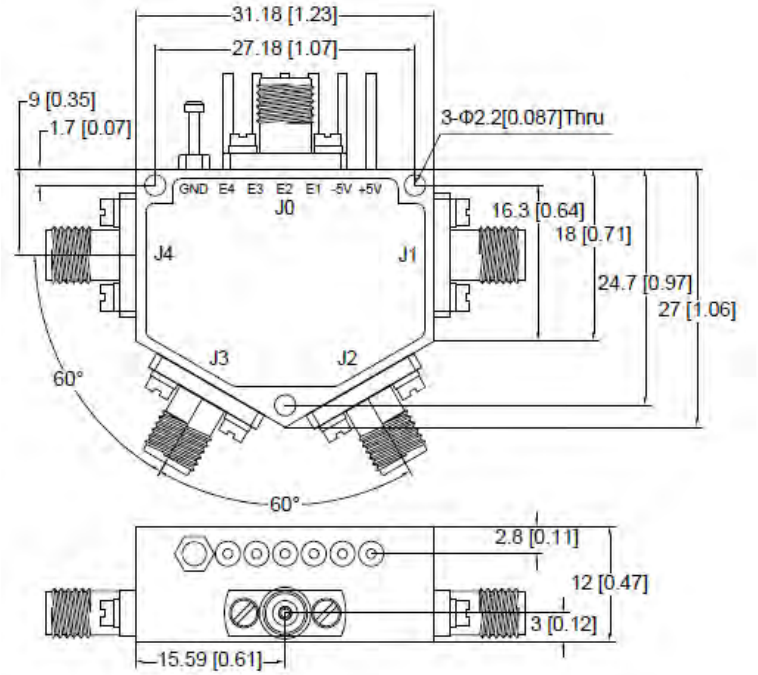

Truth Table:

Control Input TTL				Signal Path State
E4	E3	E2	E1	
1	1	1	0	J0-J1
1	1	0	1	J0-J2
1	0	1	1	J0-J3
0	1	1	1	J0-J4

Electrical Specifications	
Operating Frequencies	0.5 to 50 GHz
VSWR	2.5 (Type); 3.0 (Max.)
Isolation	50 dB (Type); 45 dB (Min)
Insertion Loss	6.5 dB (Type); 7.5 dB (Max.)
Input RF Power	+23 dBm
CW RF Power, Operating	23 dBm
Vibration	25g rms (15 degree 2KHz)
Shock	20 G for 11 msc
Bias Current (+5V /-5V)	120 / 50 mA
Switching Time	100 ns
Connectors	2.4mm (F)
Characteristic Impedance	50 Ω
Biasing	+5V,-5V
TTL Control Voltage	+5V/0V
Finishing	Gold Plating
Material	Aluminum
Weight	0.03 kg
Operating Temperature	-45 to +85℃
Storage Temperature	-55 to +125℃
Humidity	100% RH at 35℃ 95% RH at 40℃

- SMA Connector
- Reflective

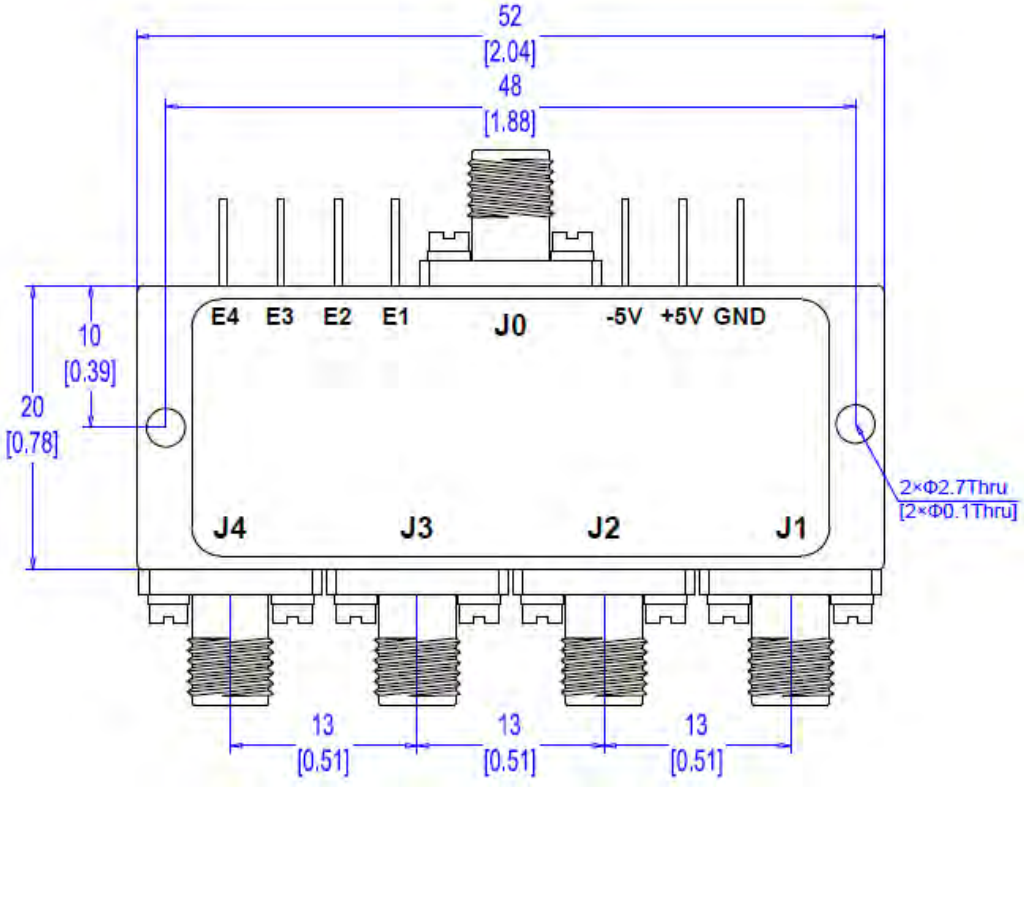

Specifications			
Frequency Range	0.05 to 26 GHz	TTL Control Voltage	+5V/0V
VSWR	2.2 (Type) ; 2.5 (Max.)	Biasing	+5V, -5V
Isolation	60 dB (Min.) ; 65 dB (Max.)	DC Bias	+5±0.5V @150mA Max.
Insertion Loss	4.5 dB (Type) ; 5 dB (Max.)		-5±0.5V @50mA Max.
RF Input Power	20 dBm	Material	Aluminum
Switching Time	100 ns (Type) ; 150 (Max.);	Finishing	Gold Plating
Connectors	SMA (F)	Shock	20G for 11 msc
Vibration	25g rms (15° 2KHz)	Weight	0.08 kg
Humidity	100% RH @ 35℃ 95% RH @ 40℃	Operating Temperature	-45 to +85℃
Characteristic Impedance	50Ω	Storage Temperature	-55 to +125℃

- SMA Connector
- Electronic Switch
- Reflective

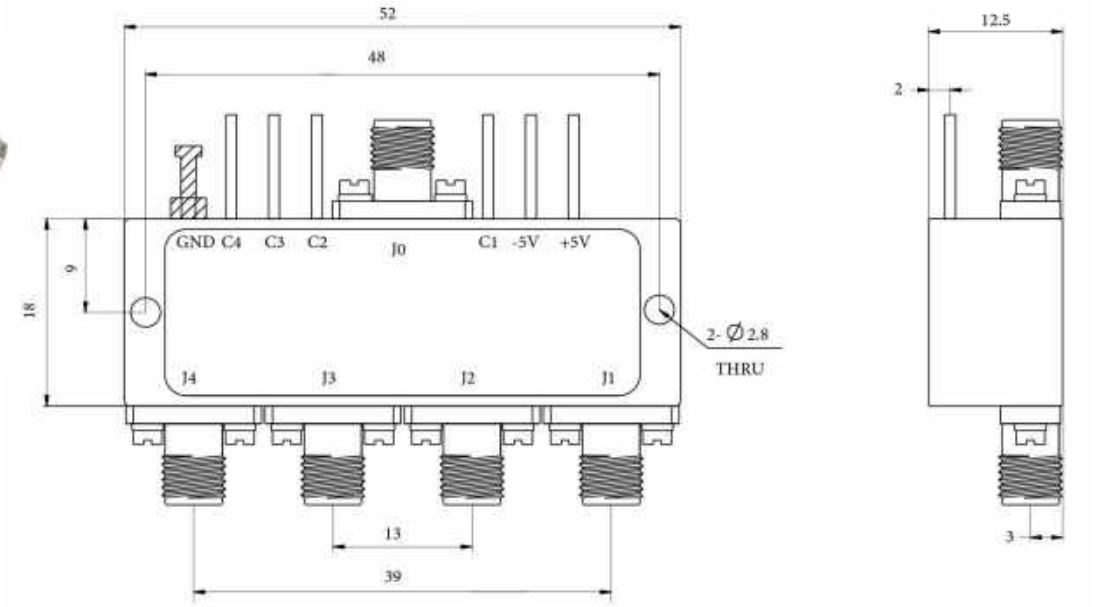

Electrical Specifications	
Operating Frequencies	1 to 6 GHz
VSWR	1.30 (Type) ; 1.50 (Max.)
Isolation	60 dB
Insertion Loss	1.4 dB (Type); 3.0 dB (Max.)
Insertion Loss Temperature Coefficient	0.003 dB/℃
RF Input Power	1 W
DC Power Dissipation	0.8 W
0.1 dB Compression Point	30 dBm
IIP3	55 dBm
Bias Current (+5V /-5V)	160 / 50 mA
Switching Time	200 ns
Connectors	SMA(F)
Characteristic Impedance	50 Ω
Finishing	Gold Plating
Material	Aluminum
Weight	0.03 kg
Operating Temperature	-45 to +85℃
Storage Temperature	-55 to +125℃

- SMA Connector
- Electronic Switch
- Reflective

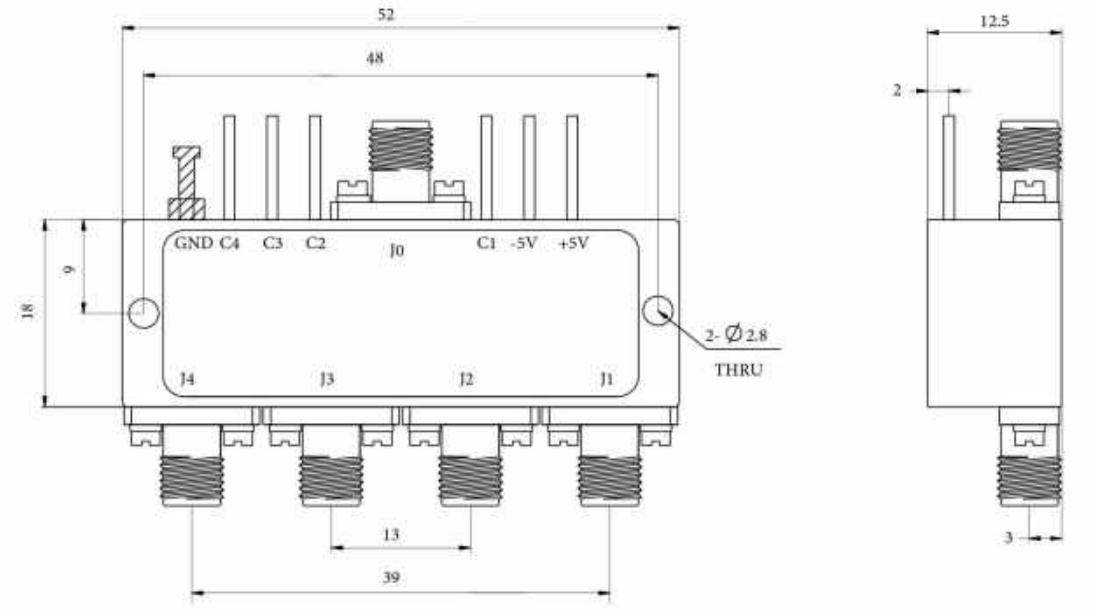

Electrical Specifications	
Operating Frequencies	0.4 to 6 GHz
VSWR	2.50
Isolation	40 dB
Insertion Loss	1.5 dB
RF Input Power	23 dBm
0.1 dB Compression Point	23 dBm
Bias Current (+5V /-5V)	160 / 50 mA
Switching Time	100 ns
Connectors	SMA(F)
Characteristic Impedance	50 Ω
Finishing	Nickel plate
Material	Aluminum
Weight	0.03 kg
Operating Temperature	-40 to +55℃
Storage Temperature	-50 to +85℃

- 2.4mm Connector
- Absorptive

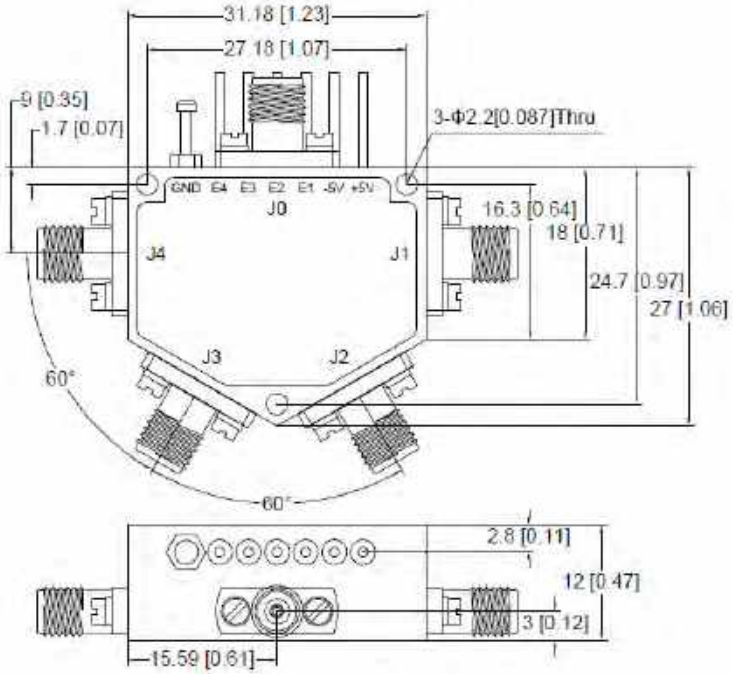

Electrical Specifications	
Operating Frequencies	30 to 50 GHz
Input VSWR	2.5 Typ. ; 3.0 Max.
Output VSWR	2.5 Typ. ; 3.0 Max.
Isolation	45 dB Min.;
Insertion Loss	7.5 dB Typ.; 8.0 dB Max.
RF Input Power	23 dBm Max.
IIP3	30 dBm Typ.
Switching Time	100 ns
Bias Current (+5V /-5V)	120 mA / 50 mA
Connectors	2.4mm-(F)
Characteristic Impedance	50 Ω
Finishing	Gold Plating
Material	Aluminum
Operating Temperature	-45 to +85℃
Storage Temperature	-55 to +125℃

Truth Table:

Control Input TTL				Signal Path State
C4	C3	C2	C1	
1	1	1	0	J0-J1
1	1	0	1	J0-J2
1	0	1	1	J0-J3
0	1	1	1	J0-J4

- 2.92mm Connector
- Absorptive

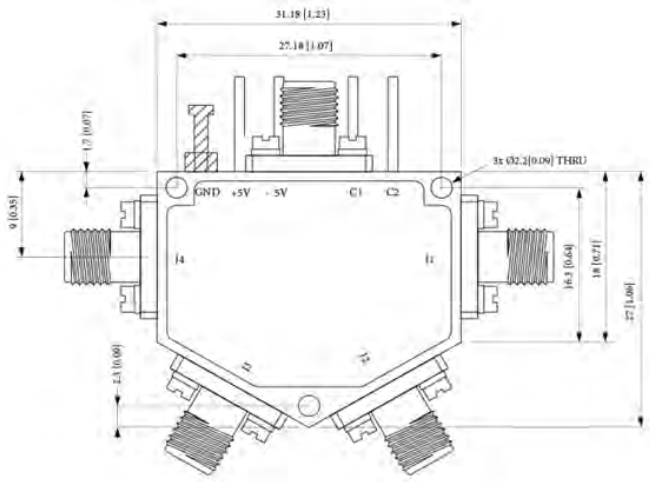

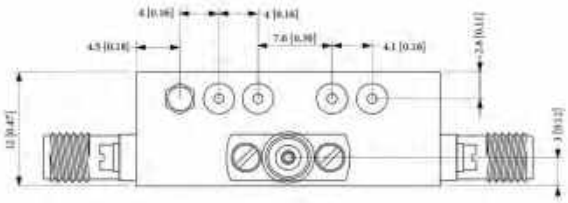

Electrical Specifications	
Operating Frequencies	0.5 to 40 GHz
VSWR	2.50 (Type) ; 3.00 (Max.)
Isolation	70 dB (Min.) 80 dB (Typ.)
Insertion Loss	6.5 dB (Type); 7.5 dB (Max.)
RF Input Power	23 dBm
DC Power Dissipation	0.15 W
0.1 dB Compression Point	23 dBm
IIP3	48 dBm
Bias Current (+5V /-5V)	120 / 50 mA
Switching Time	50 ns
Connectors	2.92mm (F)
Characteristic Impedance	50 Ω
Finishing	Gold Plating
Material	Aluminum
Weight	0.03 kg
Operating Temperature	-45 to +85℃
Storage Temperature	-50 to +125℃

Truth Table:

Control Input TTL				Signal Path State
E4	E3	E2	E1	
1	1	1	0	J0-J1
1	1	0	1	J0-J2
1	0	1	1	J0-J3
0	1	1	1	J0-J4

- SMA Connector
- Electronic Switch
- Reflective

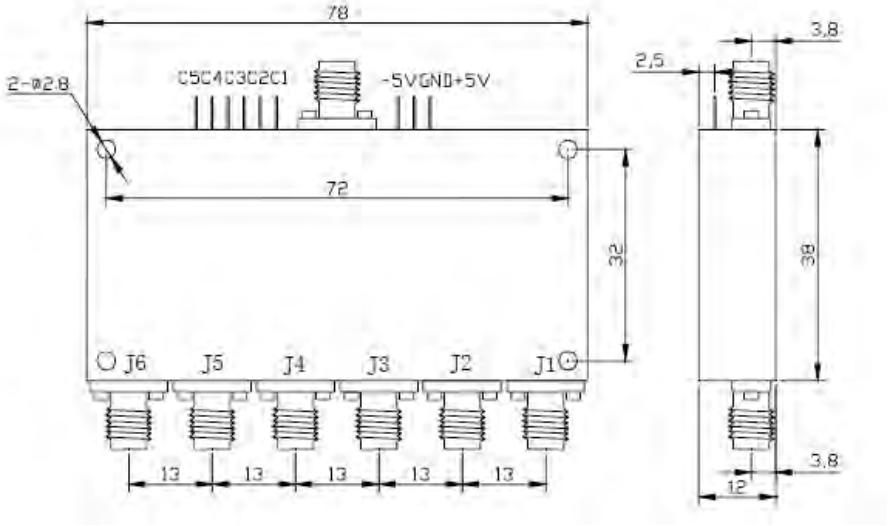

Electrical Specifications	
Operating Frequencies	1 to 6 GHz
VSWR	2.50
Isolation	55 dB
Insertion Loss	2.3 dB
RF Input Power	1 W
0.1 dB Compression Point	30 dBm
Bias Current (+5V /-5V)	160 / 50 mA
Switching Time	100 ns
Connectors	SMA(F)
Characteristic Impedance	50 Ω
Finishing	Nickel plate
Material	Aluminum
Weight	0.06 kg
Operating Temperature	-40 to +55℃
Storage Temperature	-50 to +85℃

- 2.92 Connector
- Electronic Switch
- Absorptive

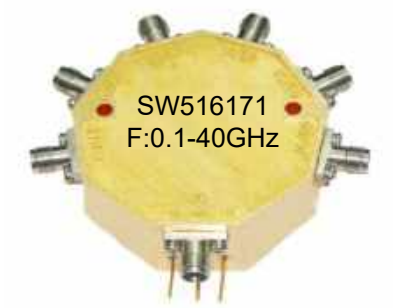

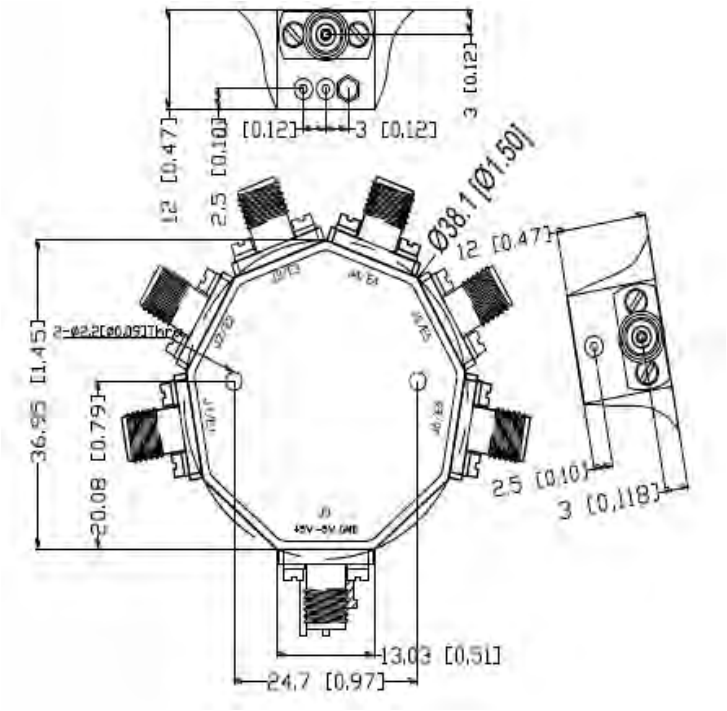

Electrical Specifications	
Operating Frequencies	0.1 to 40 GHz
VSWR	3.0
Isolation	50 dB
Insertion Loss	9.5 dB
RF Input Power	1 W
0.1 dB Compression Point	23 dBm
Bias Current (+5V /-5V)	100 / 30 mA
Switching Time	500 ns
Connectors	2.92(F)
Characteristic Impedance	50 Ω
Finishing	Gold Plating
Material	Aluminum
Weight	0.06 kg
Operating Temperature	-45 to +85℃
Storage Temperature	-50 to +85℃

Truth Table:

Control Input TTL						Signal Path State
E6	E5	E4	E3	E2	E1	
1	1	1	1	1	0	J0-J1
1	1	1	1	0	1	J0-J2
1	1	1	0	1	1	J0-J3
1	1	0	1	1	1	J0-J4
1	0	1	1	1	1	J0-J5
0	1	1	1	1	1	J0-J6

- SMA Connector
- Electronic Switch
- Absorptive

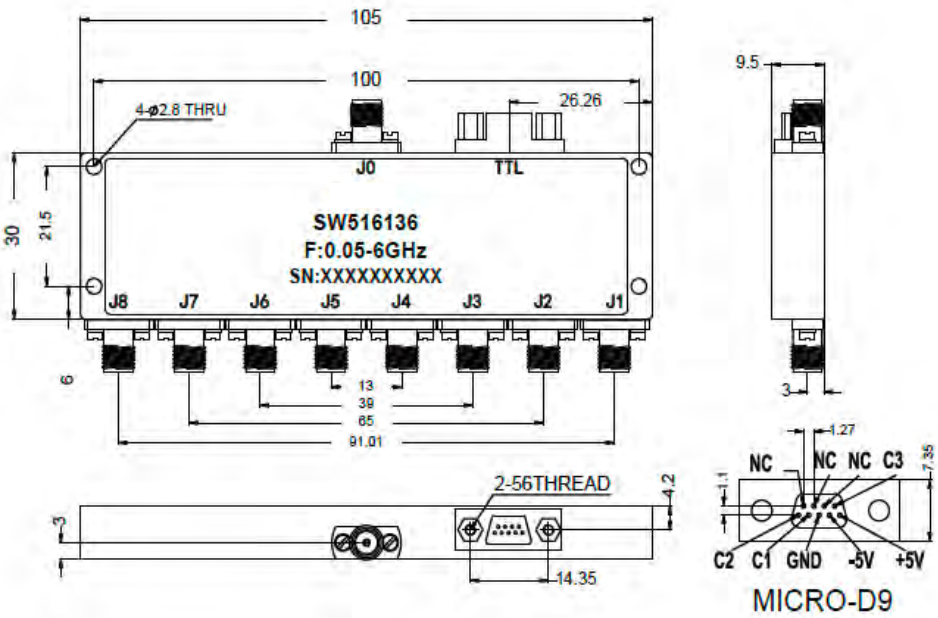

Electrical Specifications	
Operating Frequencies	0.05 to 6 GHz
VSWR	1.40 (Type) ; 1.70 (Max.)
Isolation	65 dB @ 0.05 to 1.6 GHz 70 dB @ 1.6 to 2.0 GHz 60 dB @ 2.0 to 2.8 GHz 70 dB @ 2.8 to 6.0 GHz
Insertion Loss	1.6 dB (Type); 2.0 dB (Max.) @ 0.05 to 2 GHz; 2.8 dB (Type); 3.2 dB (Max.) @ 2 to 6 GHz
Insertion Loss Temperature Coefficient	0.003 dB/℃
RF Input Power	1 W
DC Power Dissipation	1.5 W
0.1 dB Compression Point	30 dBm
IIP3	55 dBm
Bias Current (+5V /-5V)	60 / 50 mA
Switching Time	500 ns
Connectors	SMA(F)
Interface and Control Connector	Micro-D9
Characteristic Impedance	50 Ω
Finishing	Gold Plating
Material	Aluminum
Weight	0.080 kg
Operating Temperature	-45 to +85℃
Storage Temperature	-55 to +125℃

- 2.4mm Connector
- Electronic Switch
- Absorptive

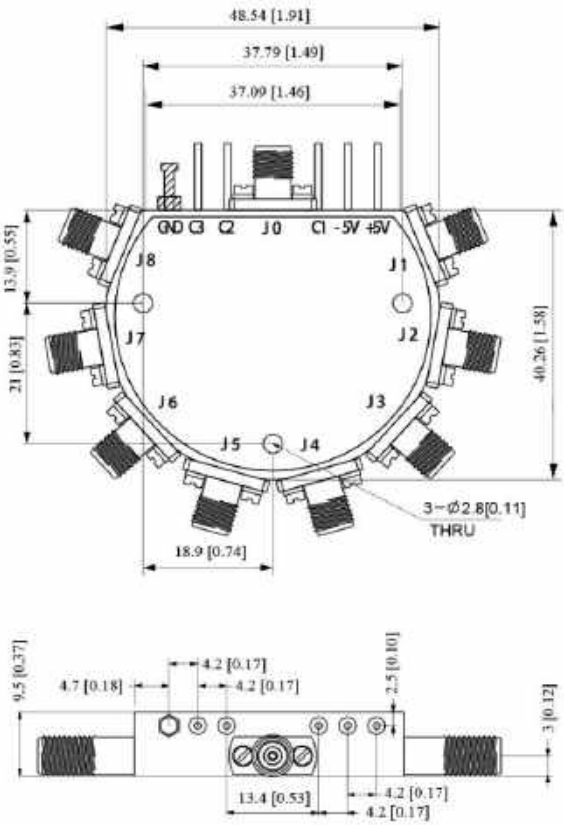

Truth Table:

Control Input TTL			Signal Path State
E3	E2	E1	
0	0	0	J0-J1
0	0	1	J0-J2
0	1	0	J0-J3
0	1	1	J0-J4
1	0	0	J0-J5
1	0	1	J0-J6
1	1	0	J0-J7
1	1	1	J0-J8

Electrical Specifications	
Operating Frequencies	0.5 to 50 GHz
VSWR	2.5 (Type); 3.0 (Max.)
Isolation	50 dB (Type); 45 dB (Min)
Insertion Loss	9.0 dB (Type); 10 dB (Max.)
Input RF Power	+23 dBm
CW PF Power，Operating	23 dBm (Max.)
Vibration	25g rms (15degree 2KHz)
Shock	20 G for 11 msc
Bias Current (+5V /-5V)	300 / 50 mA
Switching Time	100 ns
Connectors	2.4mm (F)
Characteristic Impedance	50 Ω
Biasing	+5V,-5V
TTL Control Volatage	+5V/0V
Finishing	Gold Plating
Material	Aluminum
Weight	0.05 kg
Operating Temperature	-45 to +85℃
Storage Temperature	-55 to +125℃
Humidity	100% RH at 35℃ 95% RH at 40℃

- 2.92mm Connector
- Absorptive

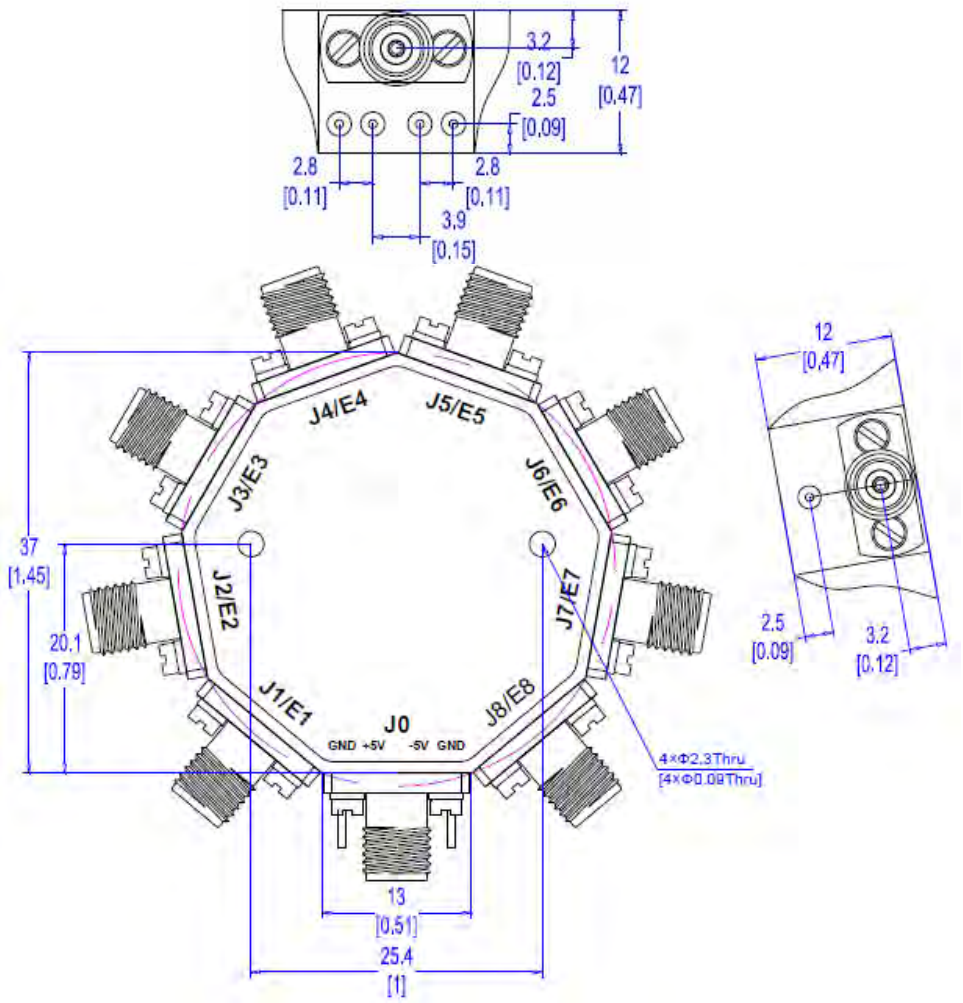

Specifications			
Frequency Range	0.5 to 40 GHz	TTL Control Voltage	+5V/0V
VSWR	2.5 (Type) ; 3.5 (Max.)	Biasing	+5V, -5V
Isolation	50 dB Min.	DC Bias	+5±0.5V @400mA Max.
Insertion Loss	8 dB (Type) ;10 dB (Max.)		-5±0.5V @50mA Max.
RF Input Power	20 dBm	Material	Aluminum
Switching Time	100 ns	Finishing	Gold Plating
Connectors	2.92mm (F)	Shock	20G for 11 msc
Vibration	25g rms (15° 2KHz)	Weight	0.08 kg
Humidity	100% RH @ 35℃ 95% RH @ 40℃	Operating Temperature	-45 to +85℃
Characteristic Impedance	50Ω	Storage Temperature	-55 to +125℃

- SMA Connector
- Absorptive

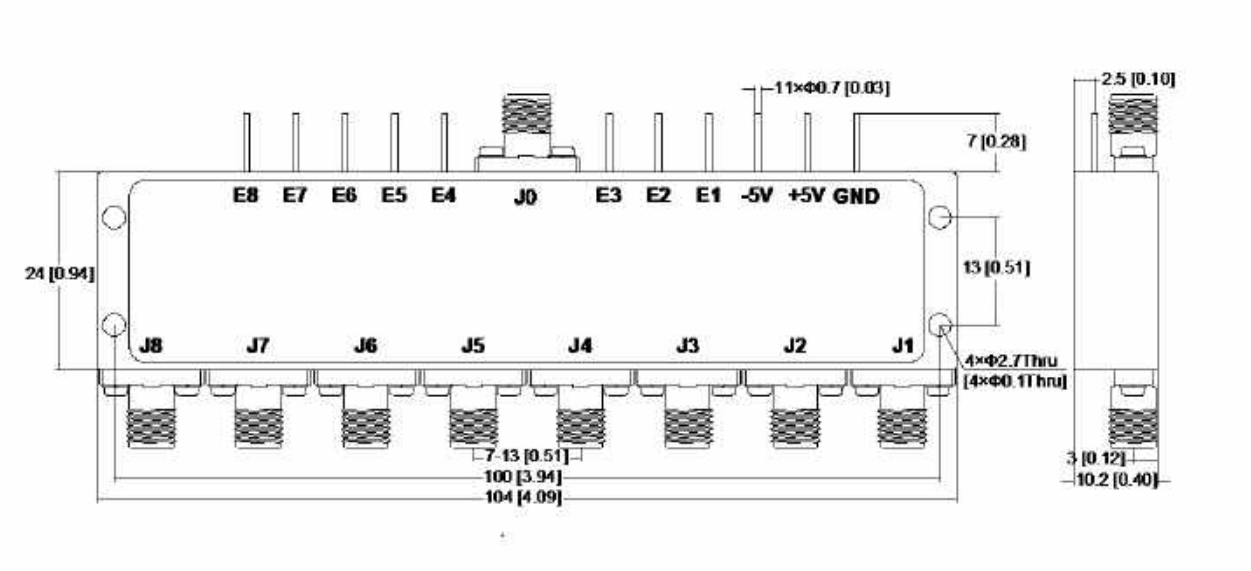

Electrical Specifications	
Operating Frequencies	1 to 18 GHz
VSWR	2.0 Max.
Isolation	60 dB Min.
Insertion Loss	4.8 dB Max.
RF Input Power	30 dBm
Bias Current (+5V /-5V)	400mA / 50 mA
Switching Speed	100 ns Max.
TTL Control Voltage	+5V/0V
Connectors	SMA (F)
Finishing	Gold Plating
Material	Aluminum
Operating Temperature	-45 to +85℃
Storage Temperature	-55 to +125℃

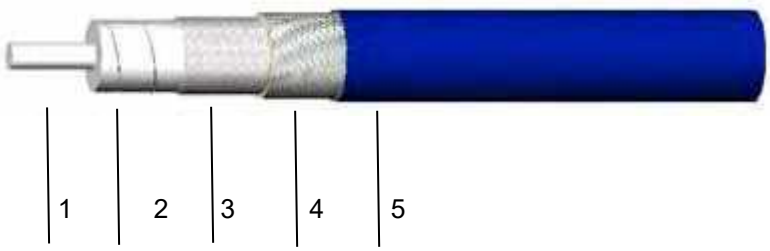

Structure Size			
No.	Item	Size mm	Materials
1	Inner Conductor	0.91 ±0.02	Silver-plated Copper
2	Dielectric	2.50 ±0.05	PTFE
3	Outer Conductor	2.66 ±0.05	Silver-plated Copper Strip
4	Overall Braid	3.11 ±0.08	Silver-plated Copper Wire
5	Jacket	3.60 ±0.10	Gray FEP
Mechanical Specifications			
Item			Size
Bend Radius:installation			15.00 mm
Bend Radius:repeated			36.00 mm
Weight			0.033 Kg/M
Temperature Range,operating & installation			-55 ～ +125 ℃
Electrical Specifications			
Item			Parameter
operating frequency			DC-48 GHz
Cutoff Frequency			DC-50 GHz
Impedance			50 Ω
Velocity of Propagation			82%
Sheilding Effectiveness			＞90 dB
Voltage Withstand			500 VDC

Attenuation（typecial value@25℃ & VSWR=1.0）
Average power（typecial value@40℃ & atmospheric pressure）

Frequency MHz	100	300	500	1000	3000	6000	10000	12400	18000	26500	40000
Att. dB/100 m	11.7	20.4	26.4	37.5	65.6	93.8	122.3	136.9	166.7	204.8	235.6
Avg.Power kW	1.626	0.936	0.723	0.509	0.291	0.203	0.156	0.139	0.115	0.093	0.072
K1=1. 168470											
K2=0. 000550											
Calculate Attenuation= K1* √ FMhz+K2*FMHz											

Structure Size			
No.	Item	Size mm	Materials
1	Inner Conductor	0.50	Silver-plated Copper
2	Dielectric	1.38	PTFE
3	Outer Conductor	1.54	Silver-plated Copper Strip
4	Overall Braid	1.89	Silver-plated Copper Wire
5	Jacket	2.20	Gray FEP

Mechanical Specifications	
Item	Size
Bend Radius:installation	8.80 mm
Bend Radius:repeated	22.00 mm
Weight	0.016 Kg/M
Temperature Range,operating & installation	-55 ~ +125 ℃

Electrical Specifications	
Item	Parameter
Cutoff Frequency	DC-50 GHz
Impedance	50 Ω
Velocity of Propagation	82%
Sheilding Effectiveness	90 dB
Voltage Withstand	400 V,DC

Attenuation（typecial value@25℃ & VSWR=1.0）
Average power（typecial value@40℃ & atmospheric pressure）

Frequency MHz	300	500	1000	3000	5000	10000	12400	18000	26500	35000	40000	50000
Att. dB/100 m	34.6	44.8	63.7	111.9	145.8	209.8	235.2	287.1	354.0	412.4	444.0	502.8
Avg.Power kW	0.178	0.137	0.097	0.055	0.042	0.029	0.026	0.021	0.017	0.015	0.014	0.012

K1=1.9758324

K2=0.0012207

Calculate Attenuation= K1* √FMhz+K2*FMHz

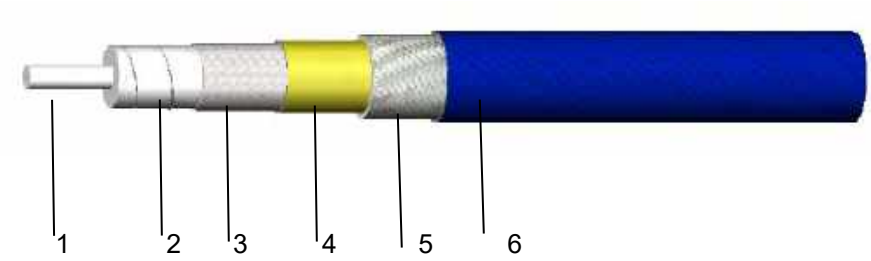

Structure Size			
No.	Item	Size mm	Materials
1	Inner Conductor	0.91	Silver-plated Copper
2	Dielectric	2.65	PTFE
3	Outer Conductor	2.85	Silver-plated Copper Strip
4	Middle layer	3.09	PTFE
5	Overall Braid	3.54	Silver-plated Copper Wire
6	Jacket	4.50	Transparent FEP
Mechanical Specifications			
Item			Size mm
Bend Radius:installation			18.00 mm
Bend Radius:repeated			35.45 mm
Weight			0.04 Kg/M
Temperature Range,operating & installation			-55 ～ +125 ℃
Electrical Specifications			
Item			Parameter
operating frequency			DC-40 GHz
Cutoff Frequency			DC-18 GHz
Impedance			50 Ω
Velocity of Propagation			76%
Sheilding Effectiveness			＞100 dB
Voltage Withstand			500 VDC

Attenuation（typecial value@25℃ & VSWR=1.0） **Average power（typecial value@40℃ & atmospheric pressure）**										
Frequency MHz	100	1000	2000	3000	6000	8000	12000	15000	18000	40000
Att. dB/100 m	12.02	38.30	50.43	66.90	95.39	110.62	136.44	153.25	168.56	257.07
Avg.Power kW	0.984	0.309	0.217	0.177	0.124	0.107	0.087	0.077	0.070	0.046
K1=1. 1973622										
K2=0. 0004400										
Calculate Attenuation= K1* √ FMhz+K2*FMHz										

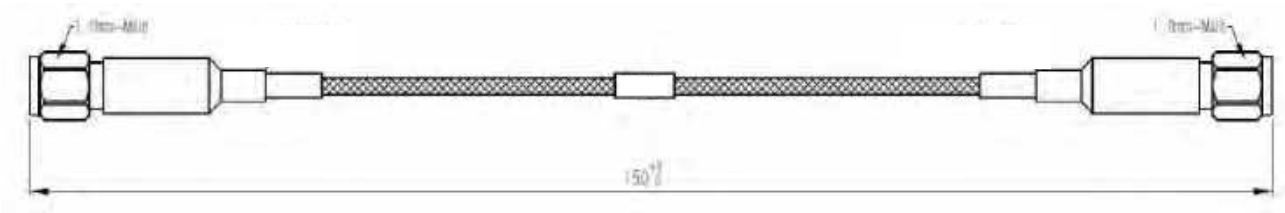

Specifications			
Connector	1.0 mm (M) -1.0 mm (M)	Heat Shrinkable Tube Material	PE with Black
Frequency Range	DC – 110 GHz	Marking	Production Date with Number
Impedance	50 Ω	Insulation Resistance	⩾5000 MΩ
Dimensions	Φ2 mm	Dielectric Strength	1000 V
Speed Ratio	82 %	Weight	50g
VSWR	1.60 @ 110 GHz	Length	150 mm
Bending radius	15 mm	Outer Contact	Soldered
Insertion Loss (Max / m @ 20℃)	3.41 dB @ 110 GHz	Temperature (AmbientRange)	-55 to +125℃

- Broad Band Coverage
- Lower Insertion Loss and VSWR
- Instrumentation Grade

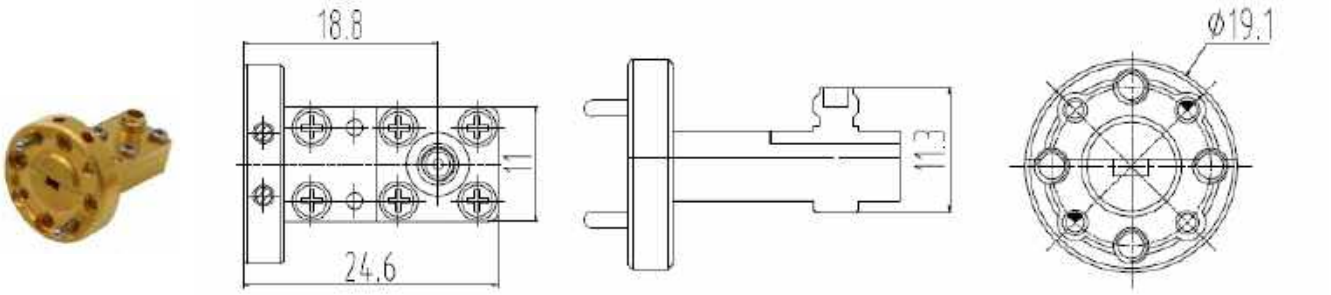

WR10-1.0mm (F)

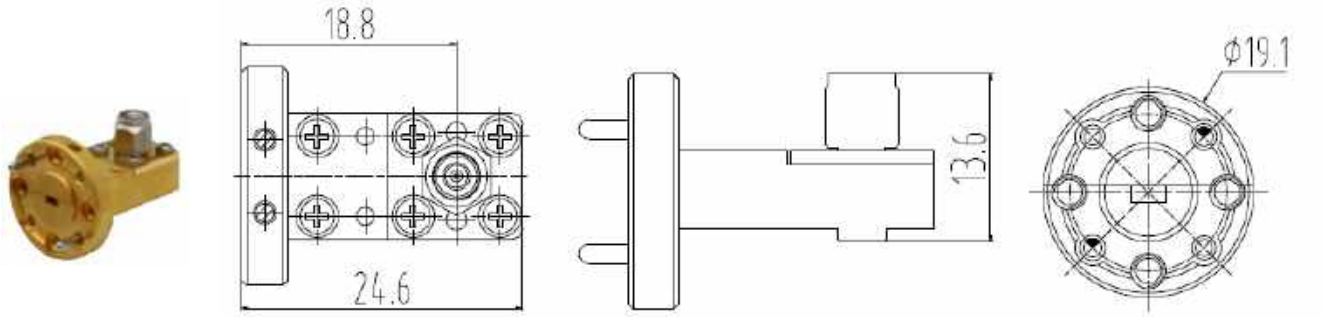

WR10-1.0mm (M)

Electrical Specifications	
Operation Frequency Band	75 ～ 110 GHz
VSWR	1.38
Flange	UG-387/U
RF Coaxial Connectors	1.0mm-(F)
Material Science	Copper
Finish Material	Gold Paint

- Broad Band Coverage
- Lower Insertion Loss and VSWR

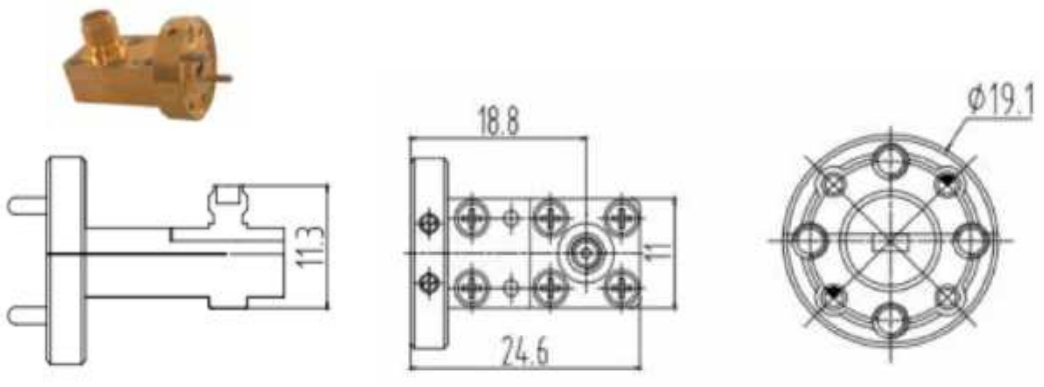

Specifications	
Waveguide	WR12
Frequency	60-90GHz
VSWR	1.38
Flange	UG-385/U
Coaxial Connector	1.0mm (f)
Material	Copper
Finish	Gold Plated

- Broad Band Coverage
- Lower Insertion Loss and VSWR
- Instrumentation Grade

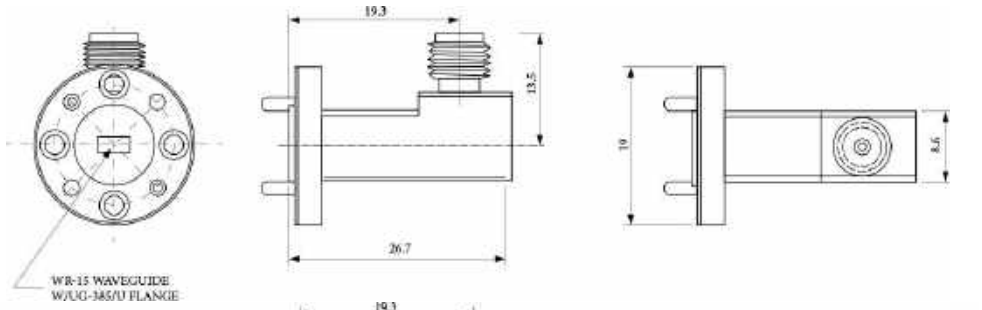

AD150002-1.85F

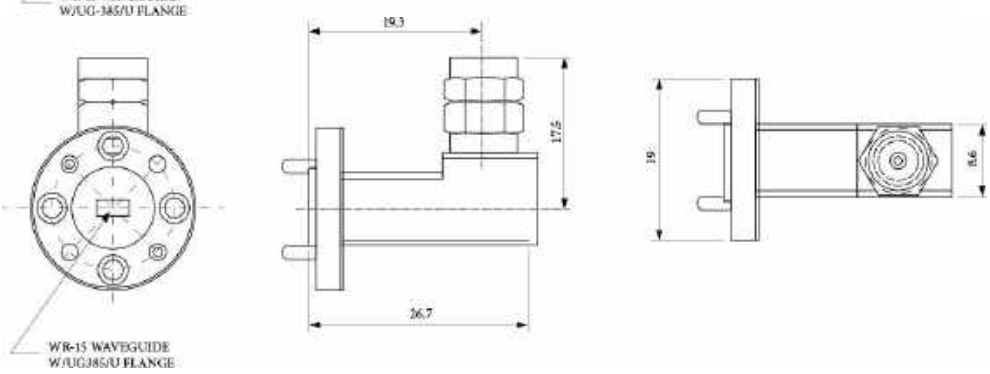

AD150002-1.85M

Specifications	
Waveguide	WR-15
Coaxial	1.85mm
Style	L Type
Frequency Range	50 to 70 GHz
Power Handing, Max.	40 W
Return Loss, Typ.	16 dB
Insertion Loss, Max.	0.5 dB
Size	26.67mm(L)*19.05mm(D)
Housing Material	Aluminum
Finish Material	Gold Plated
Weight	11.34 g

- Broad Band Coverage
- Lower Insertion Loss and VSWR
- Instrumentation Grade
- DC Open Circuit

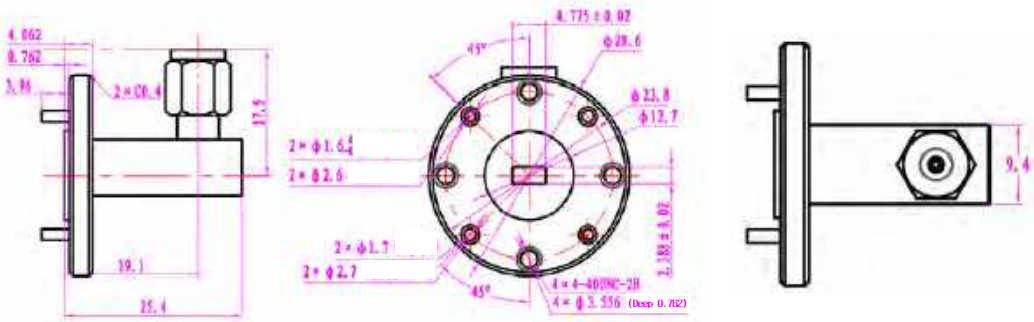

AD190002 -1.85F

AD190002-1.85M

Specifications	
Waveguide	WR-19 (BJ500)
Flann Size	UG-383 (FUGP500)
Coaxial	1.85mm
Style	L Type
Frequency Range	40 to 60 GHz
Power Handing, Max.	40 W
Return Loss, Typ.	18 dB
Insertion Loss, Max.	0.35 dB
Size	25.4mm(L)*28.6mm(D)
Housing Material	Aluminum
Finish Material	Gold Plated
Weight	15 g

- Frequency range: 50-1100GHz
- Near Gaussian Beam Typically 95%
- Standard Waveguide Interfaces
- Low Cost

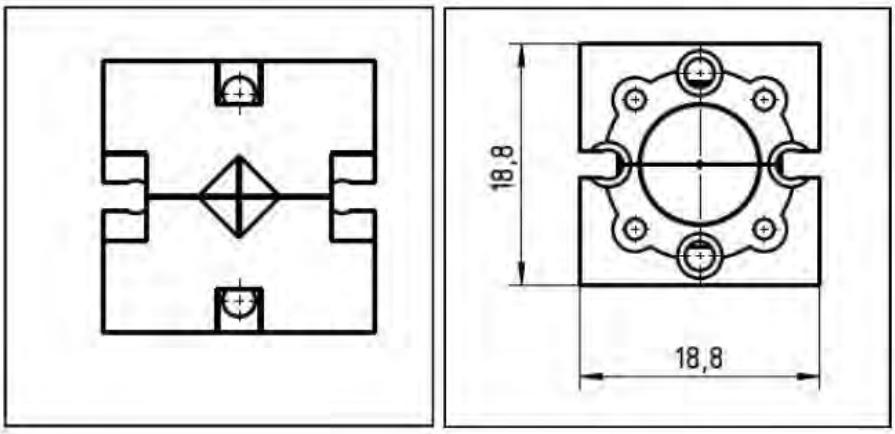

AN142029 500-750 GHz WR1.5

Part Number	Frequency GHz	Standard Gain dBi Mid Band	VSWR Typical	Waveguide	Standard Flange
AN142020	50-75	25	1.1	WR15	UG 385/U-M
AN142021	75-110	25	1.1	WR10	UG 387/U-M
AN142022	90-140	25	1.1	WR08	UG 387/U-M
AN142023	110-170	25	1.2	WR06	UG 387/U-M
AN142024	140-220	25	1.2	WR05	UG 387/U-M
AN142025	170-260	25	1.25	WR04	UG 387/U-M
AN142026	225-325	25	1.5	WR03	UG 387/U-M
AN142027	260-400	25	1.5	WR2.8	UG 387/U-M
AN142028	330-500	25	1.75	WR2.2	UG 387/U-M
AN142029	500-750	25	1.75	WR1.5	UG 387/U-M
AN142030	750-1100	25	1.75	WR1.0	UG 387/U-M

SW516169

SW516172

SW516195

PA8375159

LNA775144

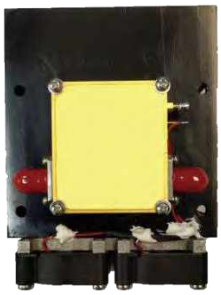

LNA775152

TC522138

AN142024

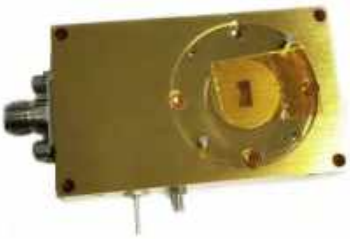

AM340616

SW515206-L

LNA775128-L

PA8375119

Yach Industry (Shanghai) Co., Ltd.

Add：Shanghai,China
Tel：+86-21-8039 4921
Mobile：+86-136 1171 4696
E-mail：info@yach.com
http：//www.yach.com
QQ：2827 4533